RoMan
Manufacturing Inc.

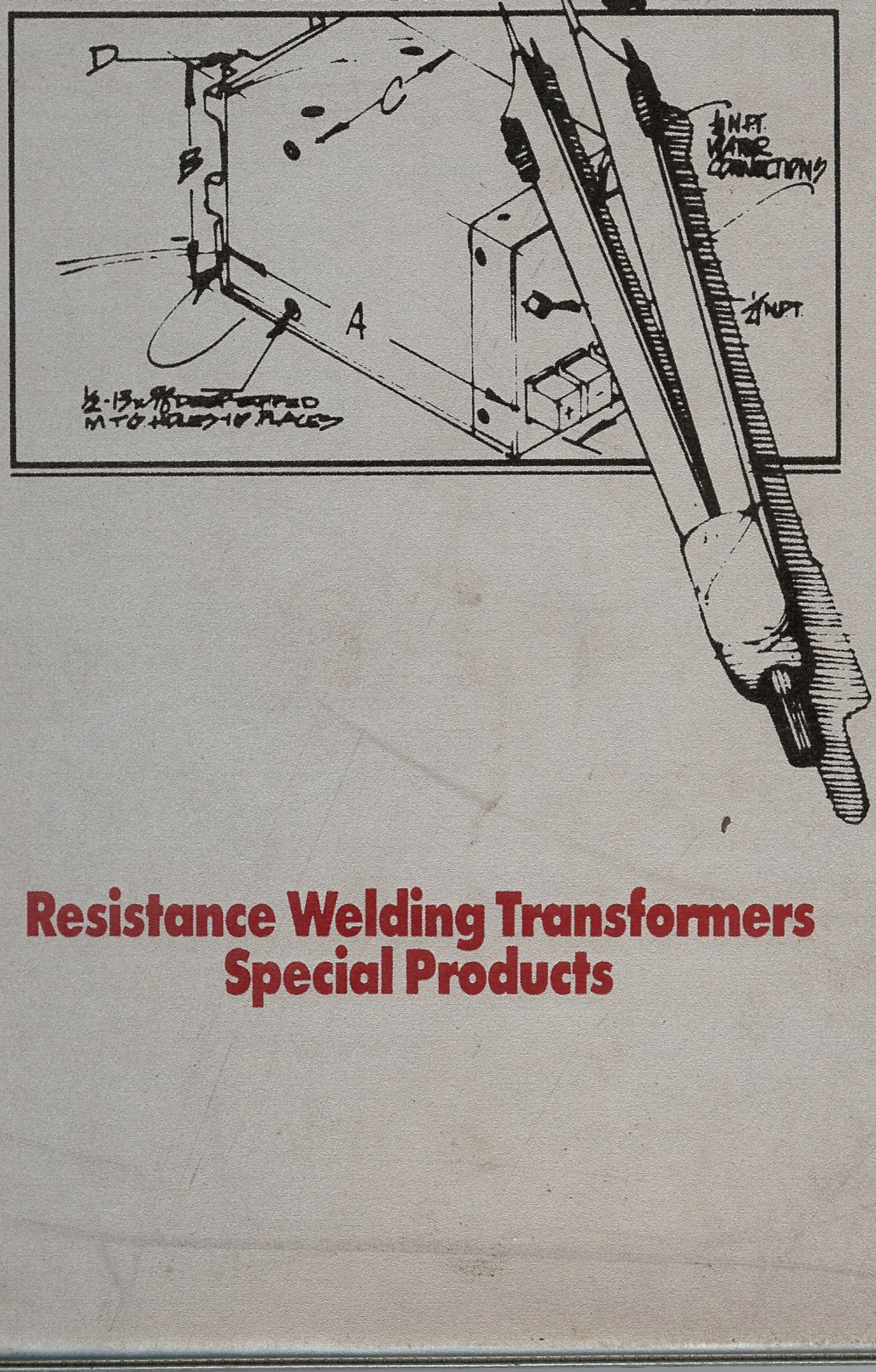

Resistance Welding Transformers
Special Products

RoMan

Manufacturing Inc.

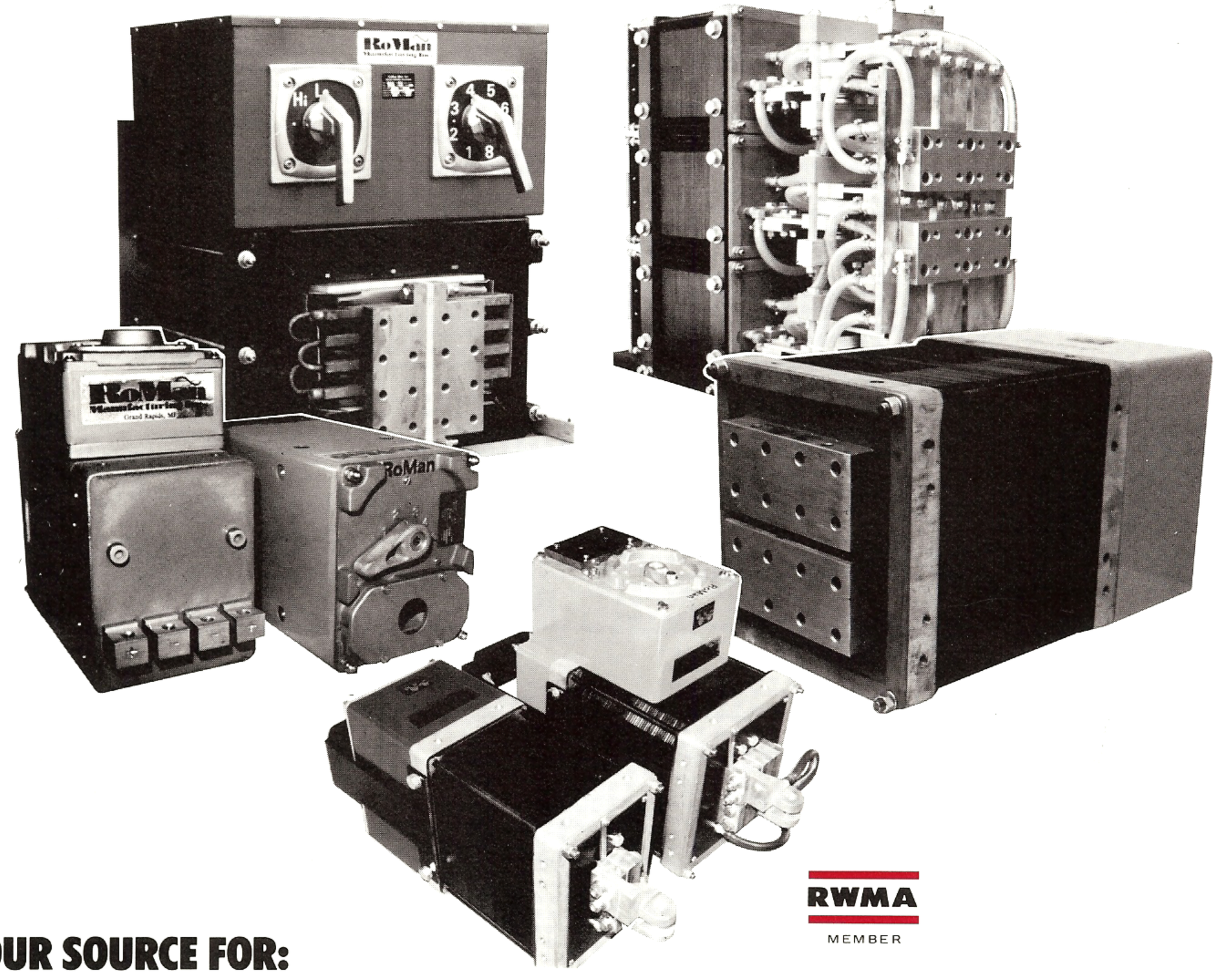

RWMA
MEMBER

YOUR SOURCE FOR:

- **Resistance Welding Transformers**
- **Transgun/Robot Type Transformers**
- **Frequency Convertor Transformers**
- **Single and Three Phase DC Power Supplies**

861 47th Street, S.W., Grand Rapids, MI 49509 • Phone (616) 530-8641 • FAX (616) 530-8953

Catalog Index	Section Color	Page or Bulletin
General Information	White	1
How to Use This Catalog	White	2
Fixture Type Transformers Features, Application	White	3
Portable Gun Type Transformers Features, Application	White	4
Machine Type Transformers Features, Application	White	5
Transgun/Robot Type Transformers Features, Application	White	6
Options	White	7
Model Number Code	White	8
Bulletins Fixture Type Transformers	Blue	F Series
Bulletins Portable Gun Type Transformers	Red	G Series
Bulletins Machine Type Transformers	Green	M Series
Bulletins Transgun/Robot Type Transformers	Orange	T Series
Bulletins Special Products	Yellow	S Series

General Information

Catalog Index	Section Color	Page or Bulletin
General Information	White	1
How to Use This Catalog	White	2
Fixture Type Transformers Features, Application	White	3
Portable Gun Type Transformers Features, Application	White	4
Machine Type Transformers Features, Application	White	5
Transgun/Robot Type Transformers Features, Application	White	6
Options	White	7
Model Number Code	White	8
Bulletins Fixture Type Transformers	Blue	F Series
Bulletins Portable Gun Type Transformers	Red	G Series
Bulletins Machine Type Transformers	Green	M Series
Bulletins Transgun/Robot Type Transformers	Orange	T Series
Bulletins Special Products	Yellow	S Series

RoMan Manufacturing Inc.
861 47th Street, S.W., Grand Rapids, MI 49509 Phone (616) 530-8641 FAX (616) 530-8953

General Information

Index

Contents	Section	Page
How to Use This Catalog	White	2
Fixture Type Transformers Features, Application	White	3
Portable Gun Type Transformers Features, Application	White	4
Machine Type Transformers Features, Application	White	5
Transgun/Robot Type Transformers Features, Application	White	6
Options	White	7
Model Number Code	White	8

How To Use This Catalog

The sections of this catalog have been color-coded to assist you in locating the necessary information:

White—General Information
Blue—Fixture Type Transformers
Red—Portable Gun Type Transformers
Green—Machine Type Transformers
Orange—Transgun/Robot Type Transformers
Yellow—Special Product Section

The General Information section contains brief descriptions of each type of transformer, typical features, applications for use, a list of common options available and the RoMan model number code.

Each product section consists of a series of bulletins containing the specifications and mechanical drawings for a specific transformer family or frame cross section. This, therefore, eliminates the need of cross referencing between specifications and mechanical drawings in different sections of this catalog. There is a bulletin quick selector chart on the back side of each product section divider. This chart cross-references the general description of a transformer family and the available KVA ratings with a specific product bulletin, allowing you to quickly locate a particular transformer model.

We hope you will find this catalog informative and helpful.

General Information

Fixture Type Transformers

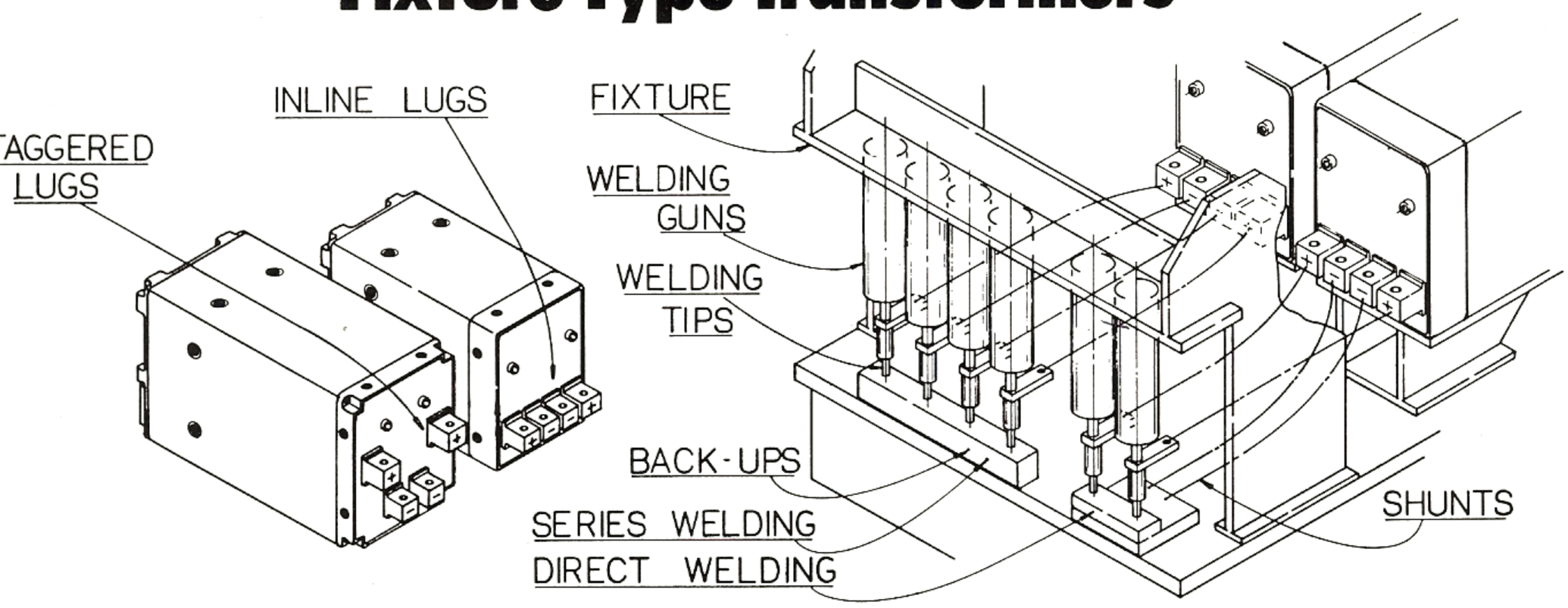

Typical Features:

Transformers of different KVA Ratings and Secondary Voltages are grouped in families with identical frame cross sections and secondary connections. Two isolated and impedance balanced secondaries are provided. Various tap switch mounting positions and primary disconnect plugs are available.

Typical Applications:

Multi-Spot Welding Fixtures. Generally Air- or Watercooled Single Conductor Cables are used to connect the transformer to the welding tool.

Available KVA Ratings:

35 to 200 KVA

RoMan Manufacturing Inc.

General Information

Portable-Gun Type Transformer

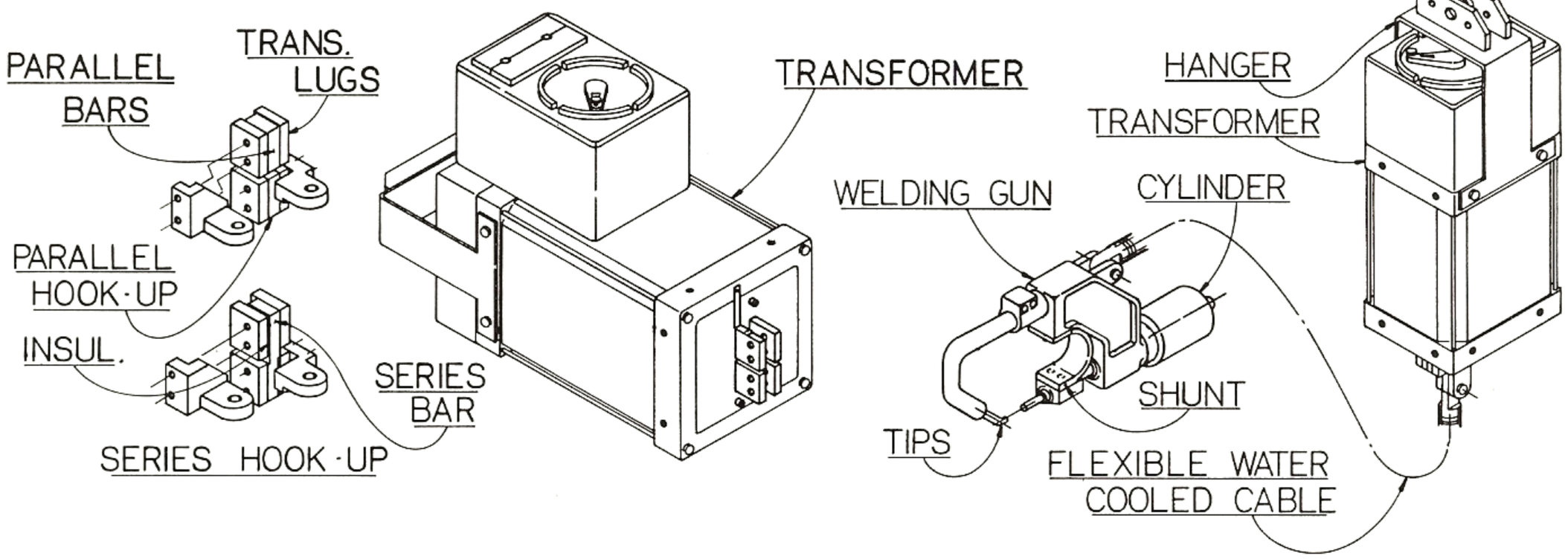

Typical Features:

The Secondary Connections are designed to accept Low Reactance Dual Conductor welding cables. The Secondaries of the Transformer can readily be changed from series to parallel connections. Transformers are supplied with a hanger for suspension of the Transformer from an overhead structure.

Typical Applications:

Resistance welding installations using portable welding guns. The transformer is generally connected to the welding tool with a dual conductor low reactance cable.

Available KVA Ratings:

50 KVA to 200 KVA

RoMan
Manufacturing Inc.

General Information

Machine Type Transformer

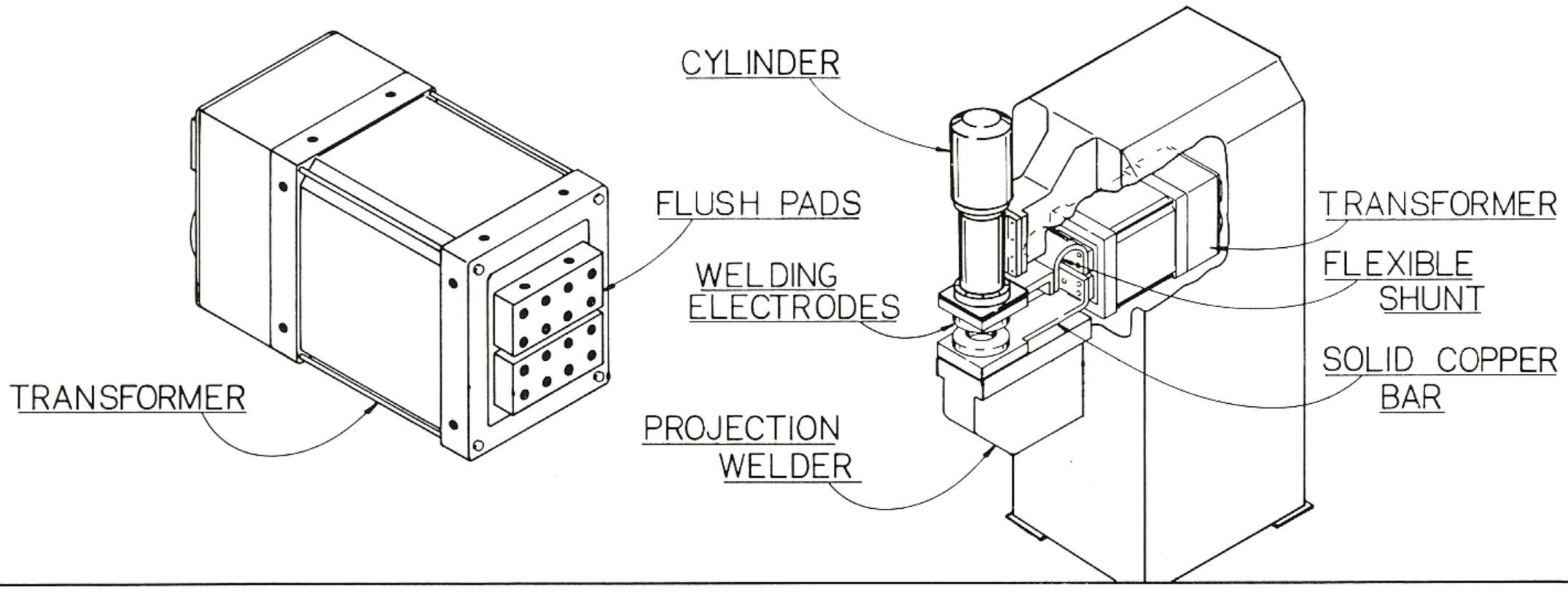

Typical Features:

The Transformer is supplied with Secondary Connection Pads conforming to RWMA standards. The Secondary Voltage range covers up to 50% of the high tap voltage. The secondary end of the transformer is potted with epoxy resin to seal out contaminants such as weldflash and to provide extra support to the secondary connections.

Typical Applications:

The Transformer is intended for use in standard spot-, projection-, and seam-welding machines. It is generally connected with bus bars or laminated shunts to the welding tooling mounted to the upper and lower knee of a welding machine.

Available KVA Ratings:

20 KVA to 500 KVA

RoMan
Manufacturing Inc.

General Information

Transgun/Robot Type Transformer

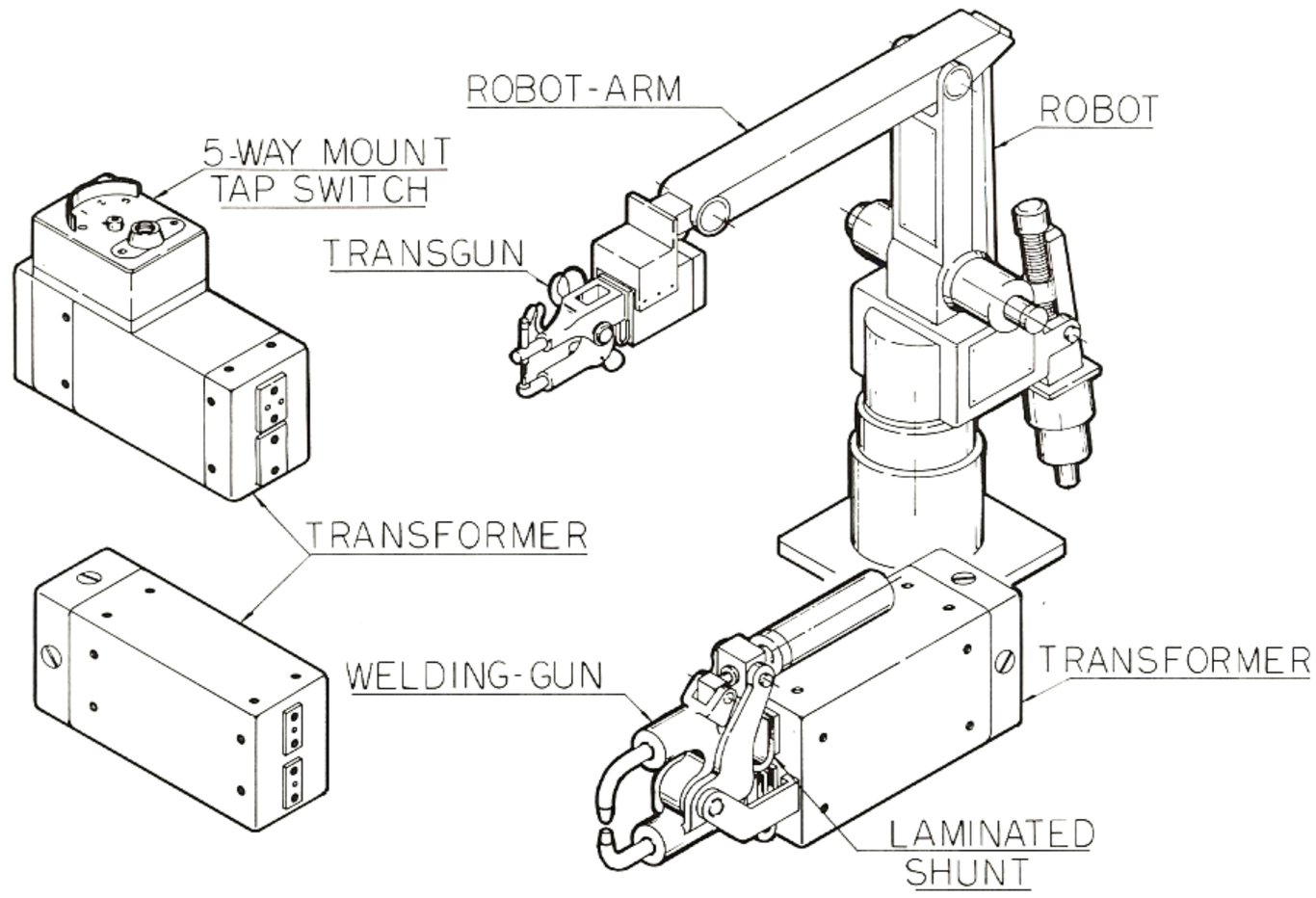

Typical Features:

These transformers distinguish themselves by their compact and light-weight design. This feature makes the transformers suitable for close coupled transformer-welding gun mounting from which the name "transgun" is derived. Transformers of different KVA ratings and secondary voltages are grouped in families with identical frame cross-sections and secondary connections. Generally, a single secondary voltage is provided, however, some models are equipped with a secondary voltage range and tap switch.

Typical Applications:

Resistance welding transguns for robots or multi-spot fixtures are typical applications. Generally, leaf shunts and shunt adaptors are used to connect the transformer to the welding tool.

Available KVA Ratings:

20 to 80 KVA.

RoMan
Manufacturing Inc.

General Information

Options

Full Potting

The transformer is completely filled with an epoxy resin which solidifies during curring. This option provides ultimate protection against external contaminants such as oil, water, weldflash, dirt, and damage caused by condensation. In addition, full potting provides outstanding resistance against mechanical shock and electromagnetic stresses.

Tap Switch Location

The standard mounting position of the tap switch is opposite the secondary connections and is called the "End Mount" position. On fixture type transformers, a 5-way mount tap switch option is available which allow the tap switch to be mounted on each of the four sides and the end of the tranformer. On portable gun and machine type transformers, a side mount switch is offered as an option. See product bulletins for details.

Primary Connections

The standard primary lead connections are solderless lugs. On fixture type transformers, a primary plug is optional to facilitate easy and quick connections of the primary leads. See product bulletins for details. Other available options are terminal boards or flexible primary leads for remote mounting of tap switches.

Over Temperature Thermostats

The thermostat is installed on the secondary windings of the transformer and signals an overtemperature condition due to a lack of cooling water.

Dual Cable Adaptors

This option allows the connections of two low reactance cables to a portable gun type transformer.

Grounding Reactors

The grounding reactor is used where direct grounding of the welding circuit is not feasible to protect the operator from electrical shock hazard, caused by capacitive coupling or insulation failure between primary and secondary coils. Typical applications are portable welding gun installations or series welding circuits in multi spot welders.

Special Primary Voltages & Frequencies

Other primary voltages and/or frequencies than listed in the catalog are available on request.

Transformers To Automotive Standards

RoMan manufactures transformers to automotive standards. Consult factory.

Special Transformers

RoMan manufactures transformers to customer specifications. We invite your inquiries.

General Information

Model Number Code

Typical Model Number: F 44 6 85 B 1 A A W X

Transformer Type
(ONE LETTER)
F= Fixture
G= Portable Gun
M= Machine

Primary Voltage
(TWO DIGITS)
22= 220 Volts
44= 440 Volts

Frequency
(ONE DIGIT)
5= 50 Hertz
6= 60 Hertz

KVA Rating
(ONE TO FOUR DIGITS)
85= 85 KVA
120= 120 KVA

Frame Size
(ONE OR TWO LETTERS)
Designates Width, Height and
Length of Transformer

Options
(ONE DIGIT)
1= Catalog Standard Item
3= Pin Type Plug

Primary End Configuration
(ONE LETTER)
A= End Mount Tap Switch With Plug
B= End Mount Tap Switch With Solderless Lugs

Secondary End Configuration
(ONE LETTER)
A= Inline Fixture Lugs (RWMA)
G= Portable Gun

Magnetic Core
(ONE LETTER)
W= Wound Core
L= Stacked Core

Full Epoxy Potting
ADD LETTER X

Note: The above list shows only some of the possible combinations for model numbers. Other options are available.

RoMan
Manufacturing Inc.

Specialists in low-voltage, high current AC or DC power-sources.

RoMan
Manufacturing Inc.

Standard and Specialty Products - Repair and Service - Custom Design

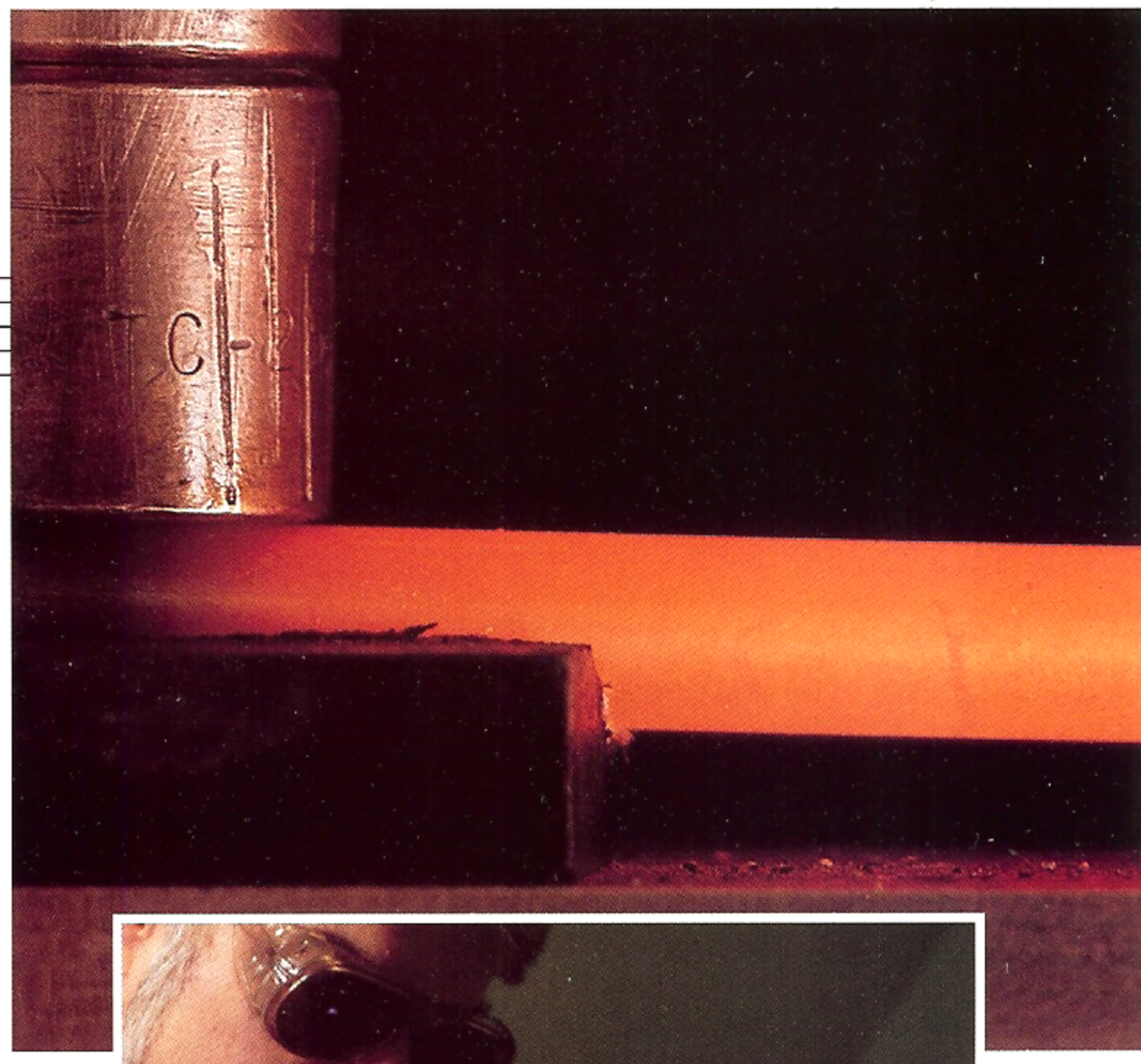

Standard and Specialty Products

For more than a decade, the manufacturers of resistance welding, resistance heating and annealing, electrobrazing, and fiberglass equipment have relied on RoMan Manufacturing for industry quality power sources. Their confidence in RoMan's high-current, low-voltage power sources is solidly based on a product built with precision from the finest materials available.

RoMan's manufacturing program specializes in industry standard resistance welding transformers, specialty design transformers, frequency converter transformers, and DC power sources. In addition, RoMan offers such related products as weld current equalizers, ground reactors, impedance meters, and tap switches.

Repair and Service

The users of this equipment have increasingly turned to RoMan for reliable service and expert repair. RoMan's service/repair department receives transformers, manufactured from all over the world, for repair and reconditioning.

RoMan services its own products, the products of other manufacturers, as well as products manufactured by companies no longer in existence. Transformer repairs are handled quickly and efficiently — sometimes in as little as 24 hours. All repairs are done in-house.

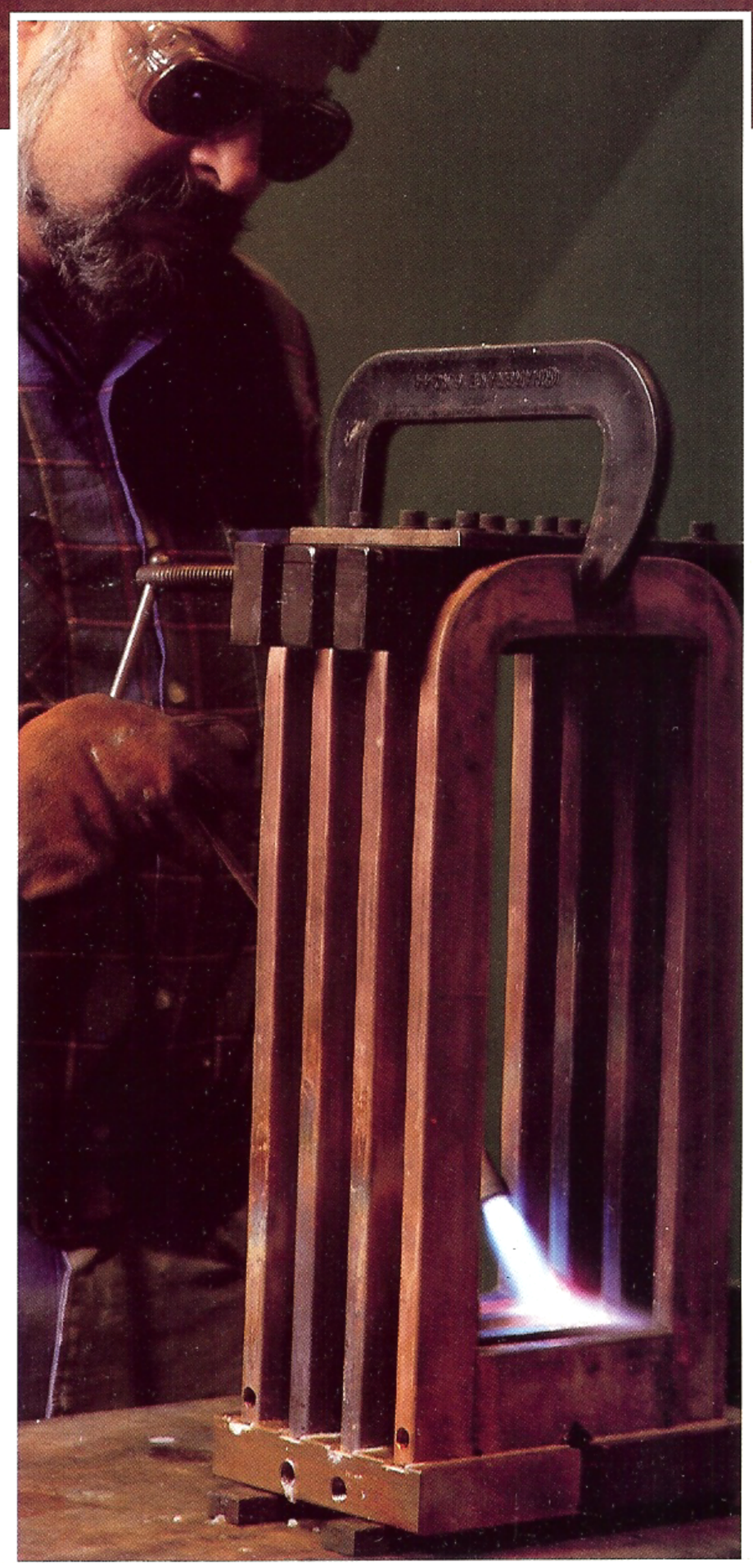



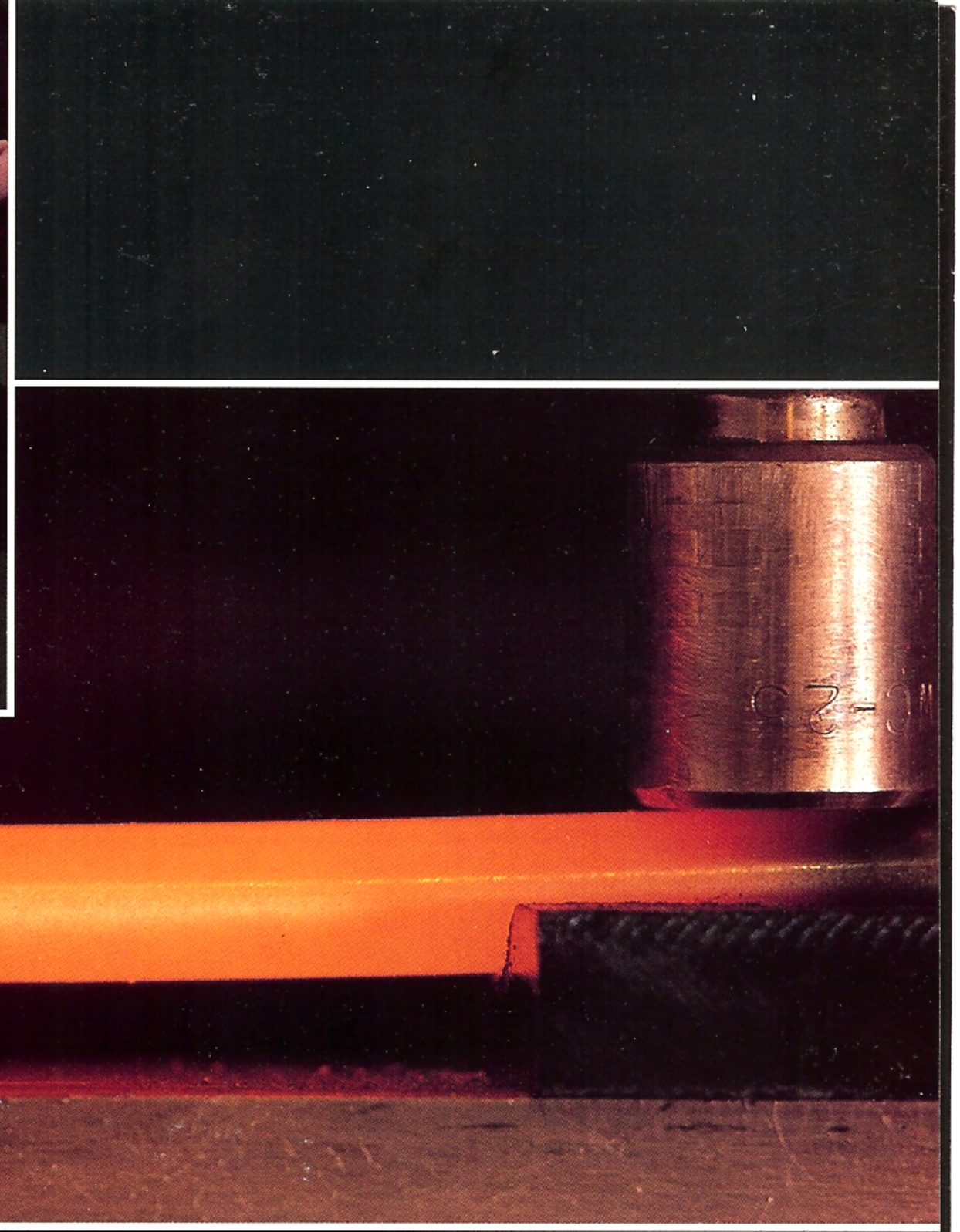

Custom Design

In recent years, more and more OEM's and users have discovered RoMan for solutions to their particular application problems. RoMan utilizes CAD to expedite the design of new products. Our engineering test lab is equipped to develop and evaluate our products under simulated field conditions. Engineers in RoMan's design department and testing lab are well trained and are fully equipped with state-of-the-art technology — ready to develop new products which will meet specific needs.

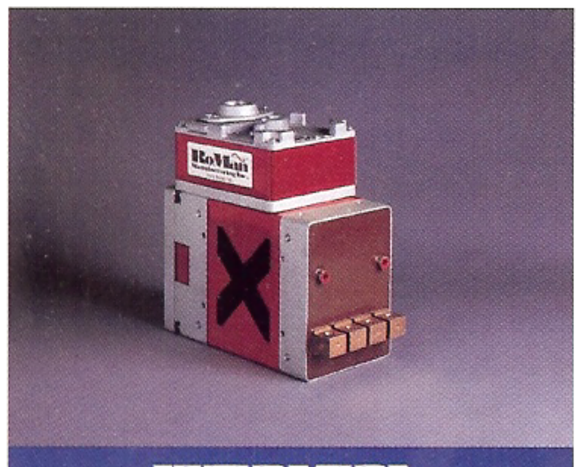

FIXTURE TYPE TRANSFORMERS

REQUEST "F" SERIES BULLETIN



PORTABLE GUN TYPE TRANSFORMERS

REQUEST "G" SERIES BULLETIN



MACHINE TYPE TRANSFORMERS

REQUEST "M" SERIES BULLETIN

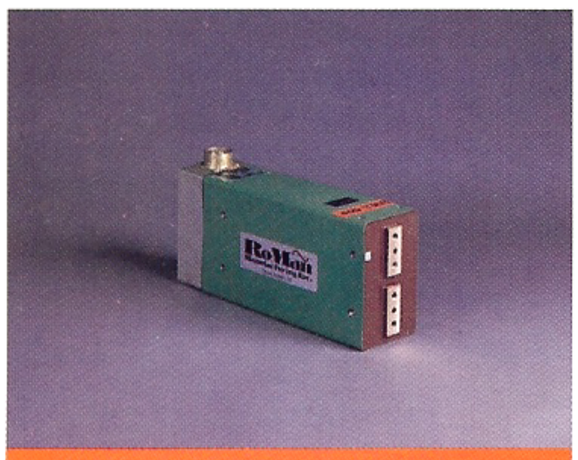

TRANSGUN/ROBOT TYPE TRANSFORMERS

REQUEST "T" SERIES BULLETIN

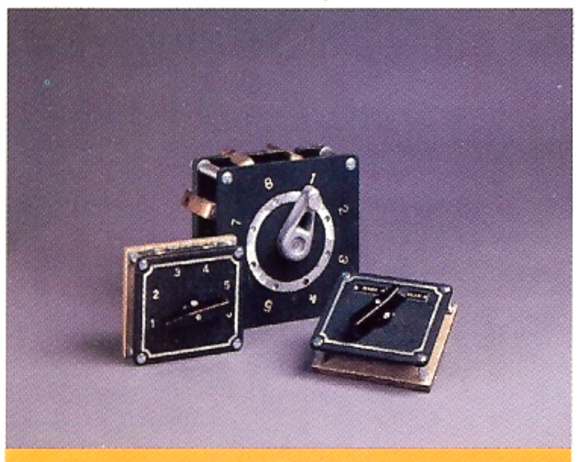

SPECIAL PRODUCTS

REQUEST "S" SERIES BULLETIN

Corporate Commitment

As a closely held family corporation, RoMan takes pride in its independence, ingenuity, and stability. Founders Dietrich Roth and Robert Hofman each brought twenty years of experience when they established the company in 1980. Together with their three sons, they still maintain a hands-on approach to running the business. Their efforts are backed by competent and committed employees in the design and manufacture of their products. They are flexible to meet the changing needs of the industry, take pride in their work, and they feel an obligation to those who rely on them for knowledgeable sales and expert service.

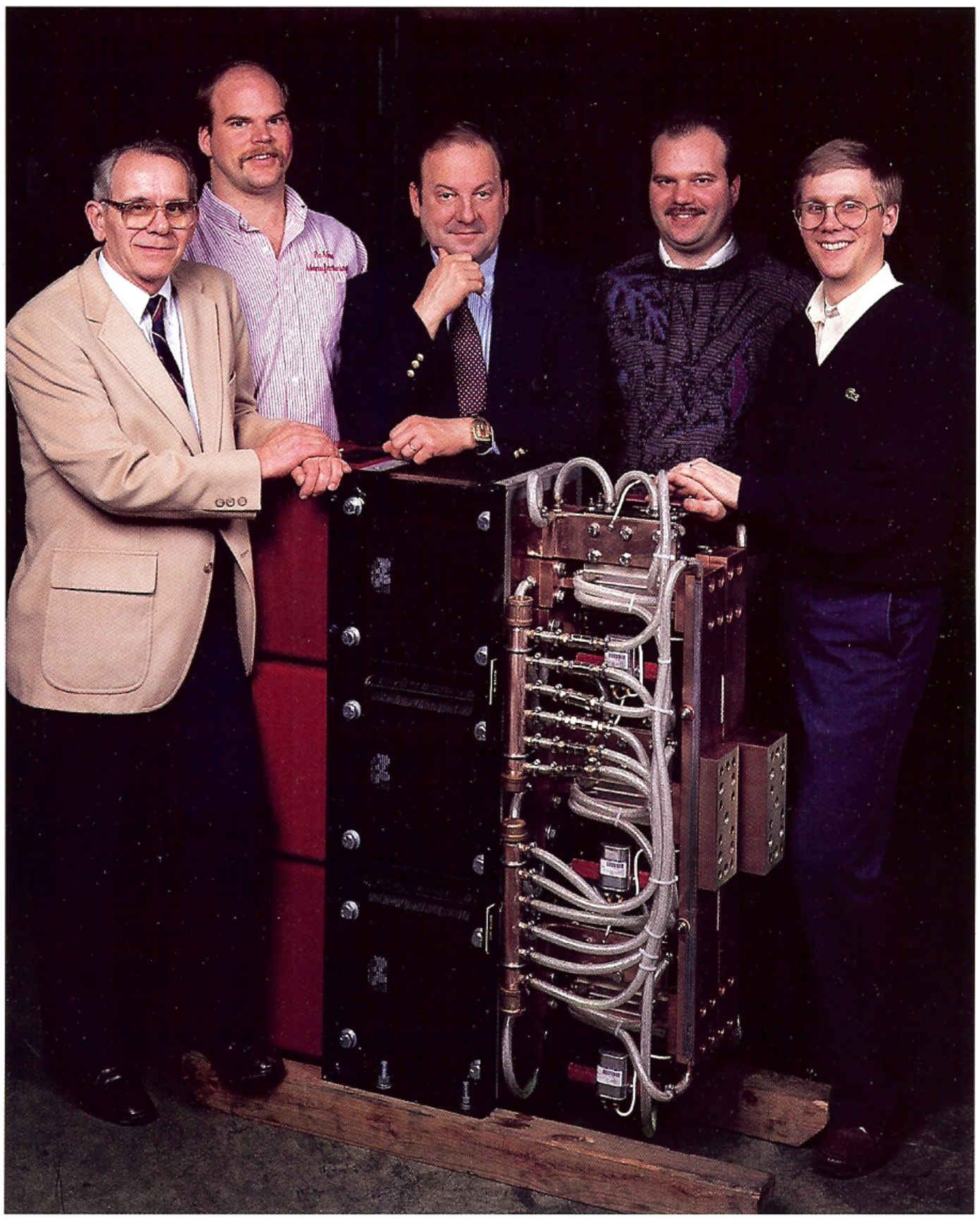

RoMan Manufacturing Inc.

861 47th Street, S.W.,
Grand Rapids, MI 49509
Phone (616) 530-8641
FAX (616) 530-8953

RWMA
MEMBER

Fixture Type Transformers

Selection Tables & Mechanical Drawings

Fixture Type Transformers

RoMan Manufacturing Inc.

861 47th Street, S.W., Grand Rapids, MI 49509 Phone (616) 530-8641 FAX (616) 530-8953

Fixture Type Transformers

Quick Selector Chart

DESCRIPTION	BULLETIN
Frame Cross Section 7¼" x 9¼" Inline Secondary Lugs **RWMA** Wound Core from 60 KVA to 120 KVA Stacked Core from 35 KVA to 65 KVA	F-1
Frame Cross Section 7¼" x 9¼" Staggered Secondary Lugs Wound Core from 60 KVA to 120 KVA Stacked Core from 35 KVA to 65 KVA	F-2
Frame Cross Section 7¼" x 9¼" Staggered Secondary Lugs **RWMA** Wound Core from 60 KVA to 120 KVA Stacked Core from 35 KVA to 65 KVA	F-2.1
Frame Cross Section 7¼'' x 9¼'' Internally Paralleled 2-Lug Wound Core from 60 KVA to 120 KVA Stacked Core from 35 KVA to 65 KVA	F-2.2
Frame Cross Section 7¾" x 10¼" Inline Secondary Lugs **RWMA** Wound Core from 120 KVA to 150 KVA Stacked Core from 80 KVA to 100 KVA	F-3
Frame Cross Section 7¾" x 10¼" Staggered Secondary Lugs Wound Core from 120 KVA to 200 KVA Stacked Core from 80 KVA to 150 KVA	F-4
Frame Cross Section 7¾" x 10¼" Staggered Secondary Lugs **RWMA** Wound Core from 120 KVA to 200 KVA Stacked Core from 80 KVA to 150 KVA	F-4.1
Frame Cross Section 7¾'' x 10¼'' Internally Paralleled 2-Lug Wound Core from 120 KVA to 200 KVA Stacked Core from 80 KVA to 150 KVA	F-4.2
Frame Cross Section 5¾'' x 9¼'' Single Secondary Wound Core from 25 KVA to 80 KVA	F-5

BULLETIN F-1

Fixture Type Resistance Welding Transformers

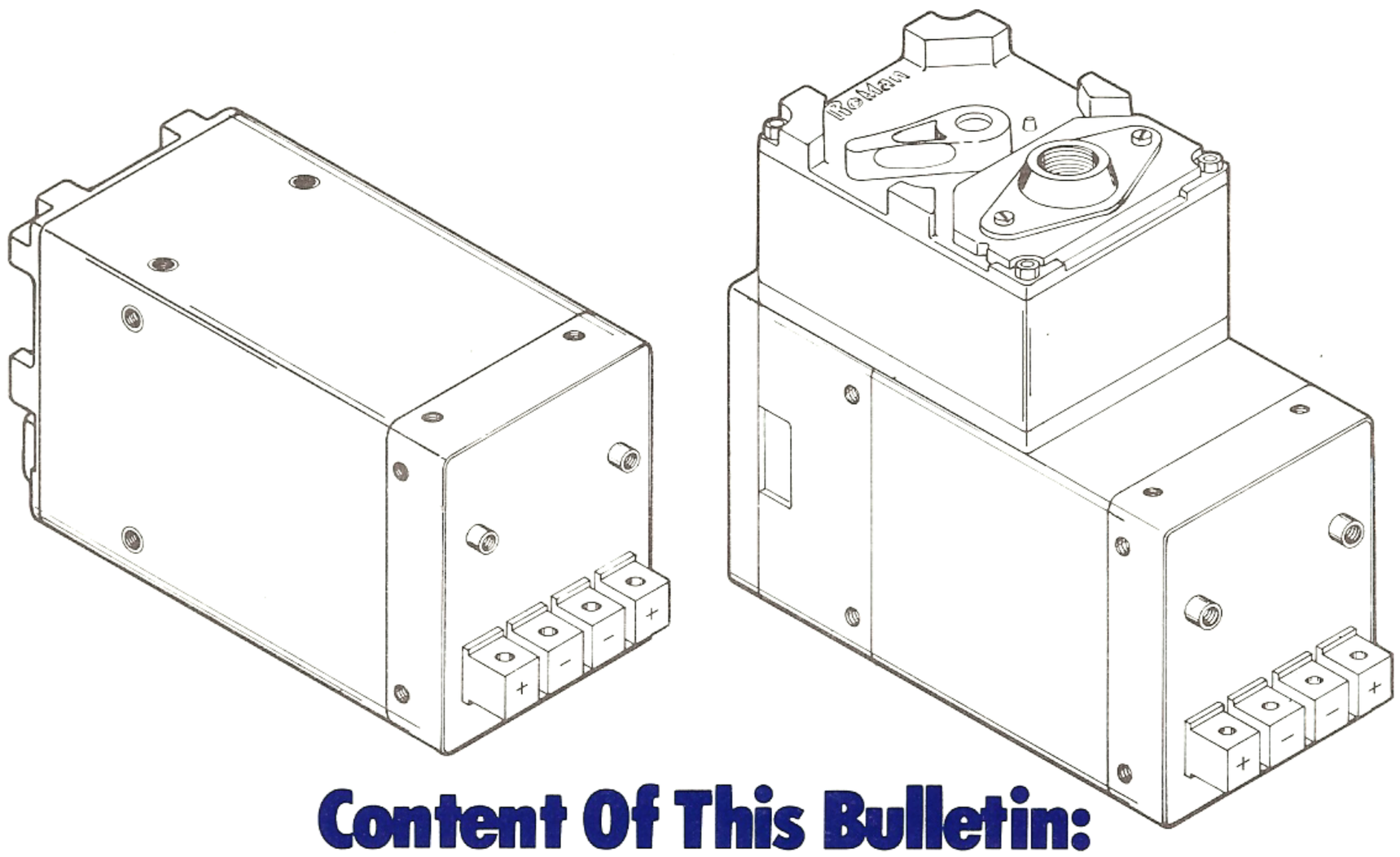

Content Of This Bulletin:

Fixture Type Transformer
Inline Secondary Lugs RWMA
Frame Cross Section 7¼ x 9¼
Wound Core 60 KVA to 120 KVA
Stacked Core 35 KVA to 65 KVA

Manufacturing Program

Fixture Type Transformers up to 200 KVA	Request "F" Series Bulletin
Portable Gun Type Transformers up to 200 KVA	Request "G" Series Bulletin
Machine Type Transformers up to 500 KVA	Request "M" Series Bulletin
Transgun/Robot Type Transformers	Request "T" Series Bulletin
Special Products	Request "S" Series Bulletin

RoMan Manufacturing Inc.
861 47th Street, S.W., Grand Rapids, MI 49509 (616) 530-8641

General Description:

- Fixture Type Transformer
- Inline Secondary Lugs RWMA
- Frame Cross Section 7¼" x 9¼"

Ordering Instructions:

- Order by model number shown
- Add "X" to model number if transformer is to be fully potted
- Specify primary conduit opening desired 1¼ NPT or 1½ NPT
- Specify tap switch position on 5-way mount models

WOUND CORE

KVA RATING 110°C RISE	SECONDARY VOLTAGE RANGE	TAP SWITCH LOCATION	PRIMARY CONNECTION	MODEL NUMBER		WEIGHT APPROX.	DWG. NO.	FRAME LETTER
				220 V/60 Hz	440 V/60 Hz			
60 RWMA TYPE A-1	3.2 to 5.0 Volts 4 Steps	End Mount	Disconnect Plug Solderless Lug	F22660A1AAW F22660A1BAW	F44660A1AAW F44660A1BAW	137 lbs.	R1287 Page 3	A
		5-Way Mount	Disconnect Plug Solderless Lug	F22660A1CAW F22660A1DAW	F44660A1CAW F44660A1DAW	142 lbs.	R1300 Page 4	
70	4.0 to 6.0 Volts 4 Steps	End Mount	Disconnect Plug Solderless Lug	F22670E1AAW F22670E1BAW	F44670E1AAW F44670E1BAW	152 lbs.	R1287 Page 3	E
		5-Way Mount	Disconnect Plug Solderless Lug	F22670E1CAW F22670E1DAW	F44670E1CAW F44670E1DAW	158 lbs.	R1300 Page 4	
85 RWMA TYPE B-1	5.2 to 7.1 Volts 4 Steps	End Mount	Disconnect Plug Solderless Lug	F22685B1AAW F22685B1BAW	F44685B1AAW F44685B1BAW	173 lbs.	R1287 Page 3	B
		5-Way Mount	Disconnect Plug Solderless Lug	F22685B1CAW F22685B1DAW	F44685B1CAW F44685B1DAW	178 lbs.	R1300 Page 4	
120	6.7 to 9.0 Volts 4 Steps	End Mount	Disconnect Plug Solderless Lug	F226120J1BAW	F446120J1AAW F446120J1BAW	200 lbs.	R1287 Page 3	J
		5-Way Mount	Disconnect Plug Solderless Lug	F226120J1DAW	F446120J1CAW F446120J1DAW	205 lbs.	R1300 Page 4	

STACKED CORE

KVA RATING 110°C RISE	SECONDARY VOLTAGE RANGE	TAP SWITCH LOCATION	PRIMARY CONNECTION	MODEL NUMBER		WEIGHT APPROX.	DWG. NO.	FRAME LETTER
				220 V/60 Hz	440 V/60 Hz			
35	2.4 to 3.5 Volts 4 Steps	End Mount	Disconnect Plug Solderless Lug	F22635A1AAL F22635A1BAL	F44635A1AAL F44635A1BAL	143 lbs.	R1287 Page 3	A
		5-Way Mount	Disconnect Plug Solderless Lug	F22635A1CAL F22635A1DAL	F44635A1CAL F44635A1DAL	148 lbs.	R1300 Page 4	
45	2.9 to 4.2 Volts 4 Steps	End Mount	Disconnect Plug Solderless Lug	F22645E1AAL F22645E1BAL	F44645E1AAL F44645E1BAL	165 lbs.	R1287 Page 3	E
		5-Way Mount	Disconnect Plug Solderless Lug	F22645E1CAL F22645E1DAL	F44645E1CAL F44645E1DAL	170 lbs.	R1300 Page 4	
55	3.2 to 5.2 Volts 4 Steps	End Mount	Disconnect Plug Solderless Lug	F22655B1AAL F22655B1BAL	F44655B1AAL F44655B1BAL	182 lbs.	R1287 Page 3	B
		5-Way Mount	Disconnect Plug Solderless Lug	F22655B1CAL F22655B1DAL	F44655B1CAL F44655B1DAL	187 lbs.	R1300 Page 4	
65	4.5 to 6.5 Volts 4 Steps	End Mount	Disconnect Plug Solderless Lug	F22665J1AAL F22665J1BAL	F44665J1AAL F44665J1BAL	225 lbs.	R1287 Page 3	J
		5-Way Mount	Disconnect Plug Solderless Lug	F22665J1CAL F22665J1DAL	F44665J1CAL F44665J1DAL	230 lbs.	R1300 Page 4	

Standard Features:

- Class "F" insulation
- Totally enclosed tap switch
- Secondary end positively sealed against contamination
- Blade type plug if applicable
- Interchangable with other manufacturers

Optional Features:

- Voltages and frequencies other than shown available on request
- Thermostats
- Pin type plug

FRAME LETTER	DIM. "A"	DIM. "B"
A	16.46	8.00
E	17.84	9.12
B	19.21	11.00
J	21.21	12.75

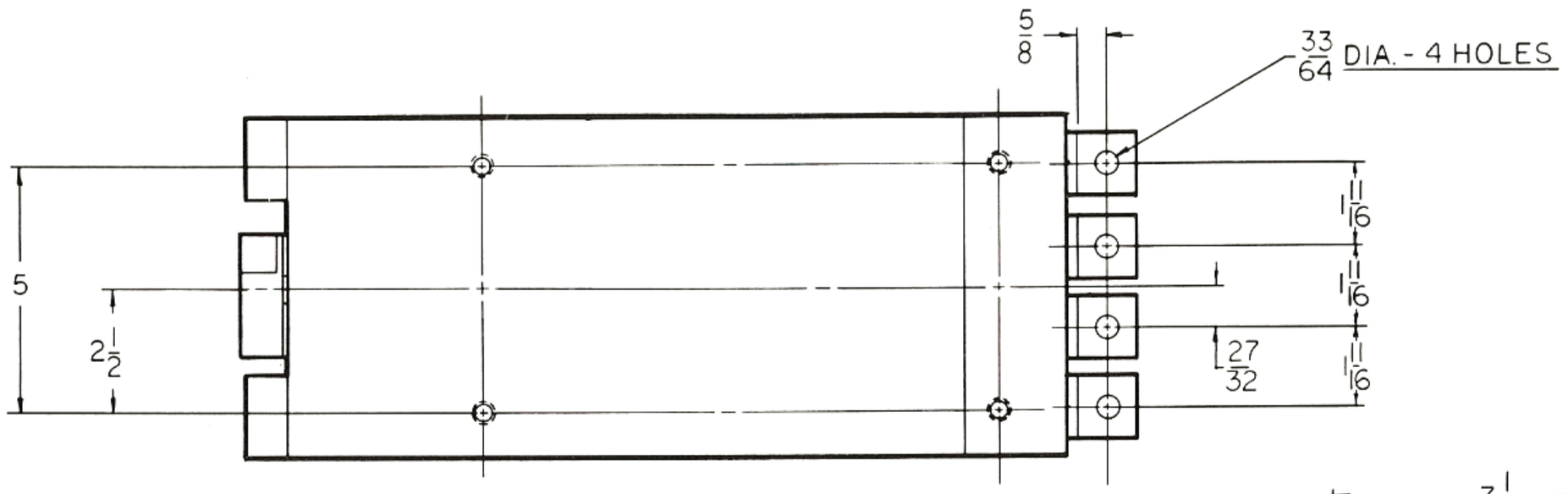

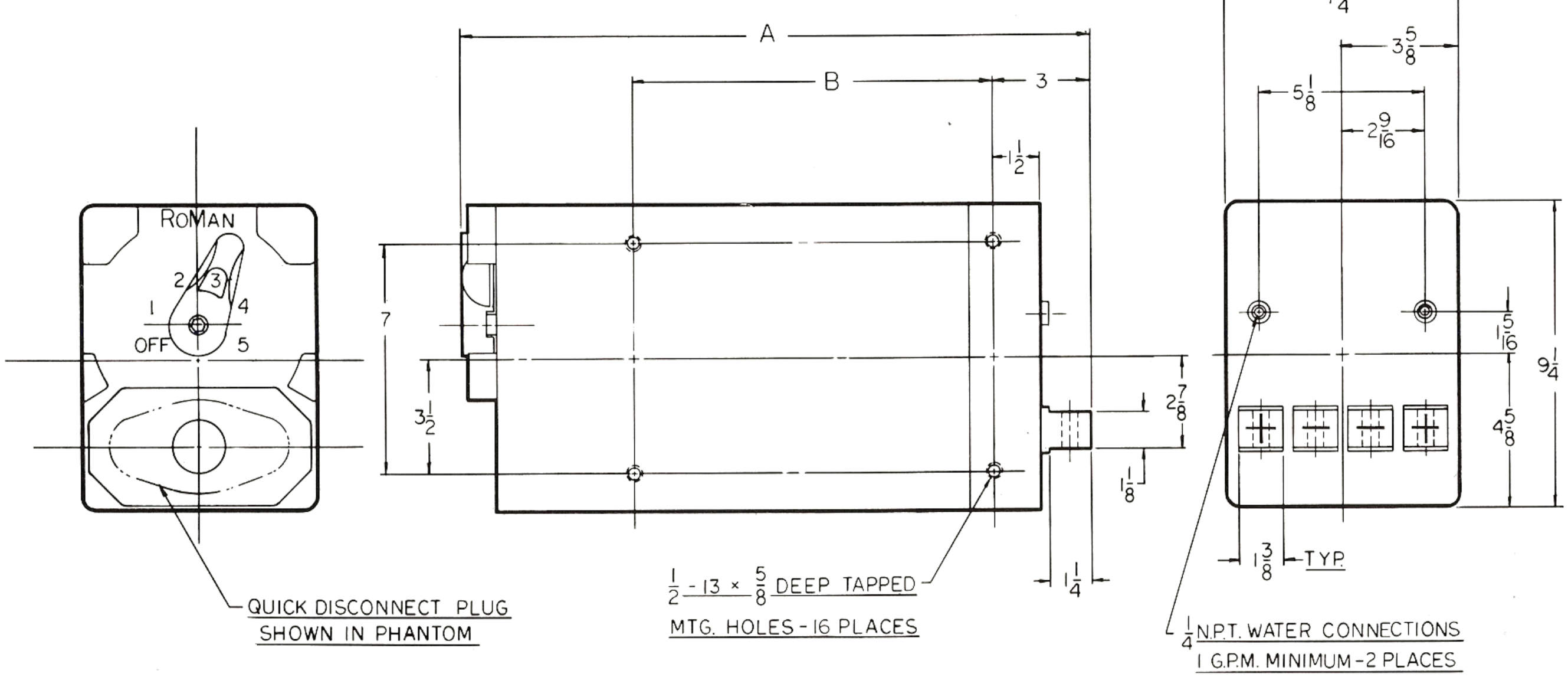

RoMan Manufacturing Inc.

FIXTURE TYPE TRANSFORMER

TAP SWITCH: END MOUNT

FRAME CROSS SECTION: $7\frac{1}{4}'' \times 9\frac{1}{4}''$

DRAWING NO. R1287

DATE: NOV., 1982

FRAME LETTER	DIM. "A"	DIM. "B"
A	18.06	8.00
E	19.18	9.12
B	21.06	11.00
J	22.75	12.75

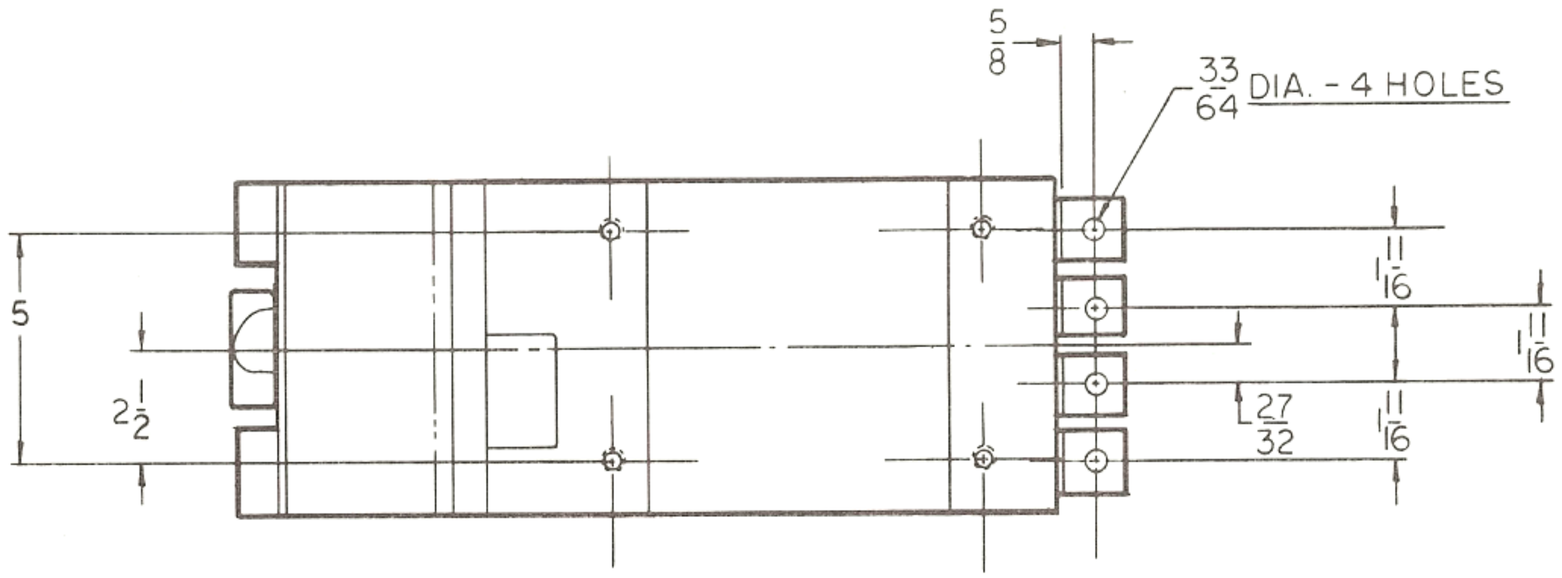

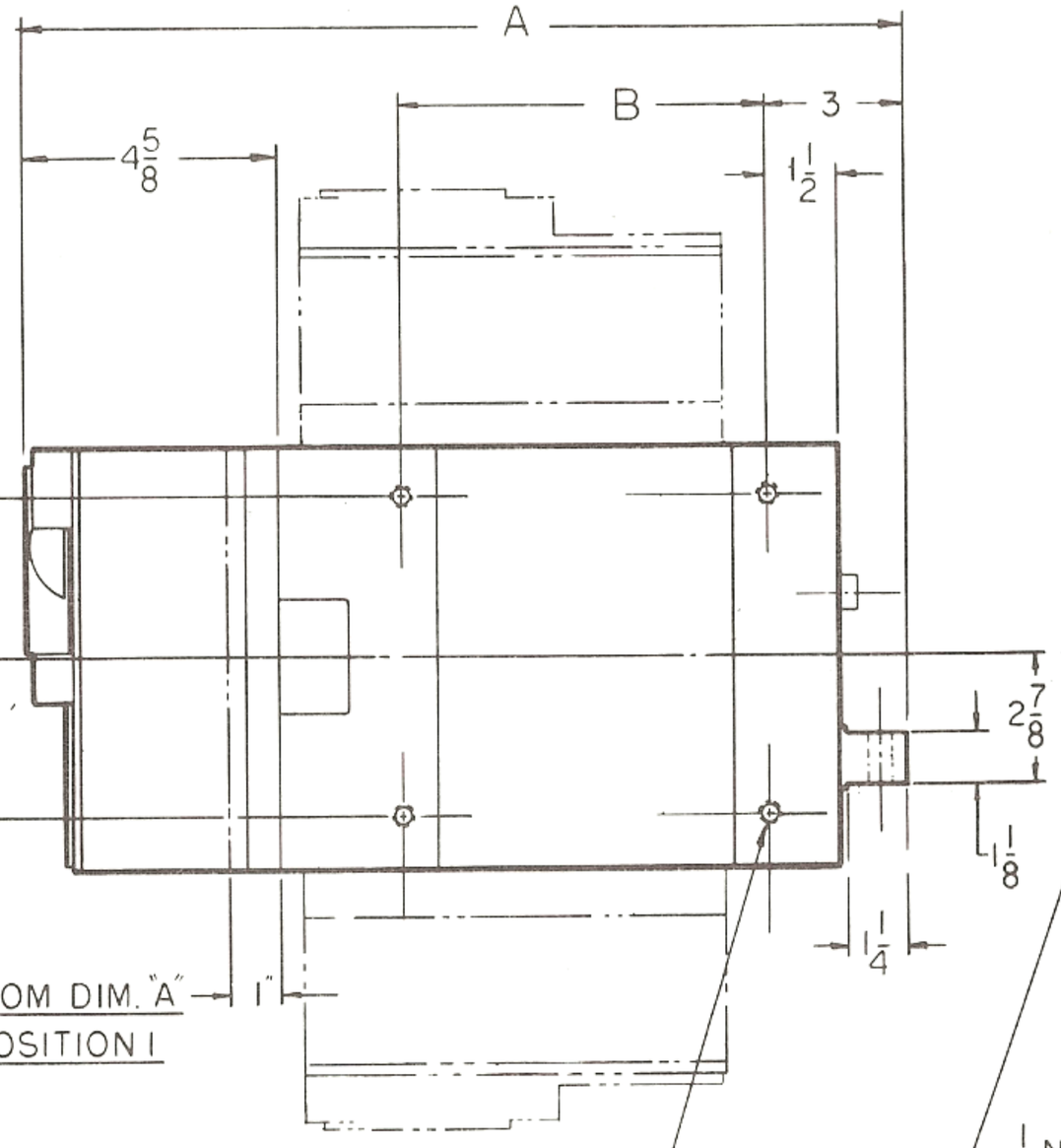

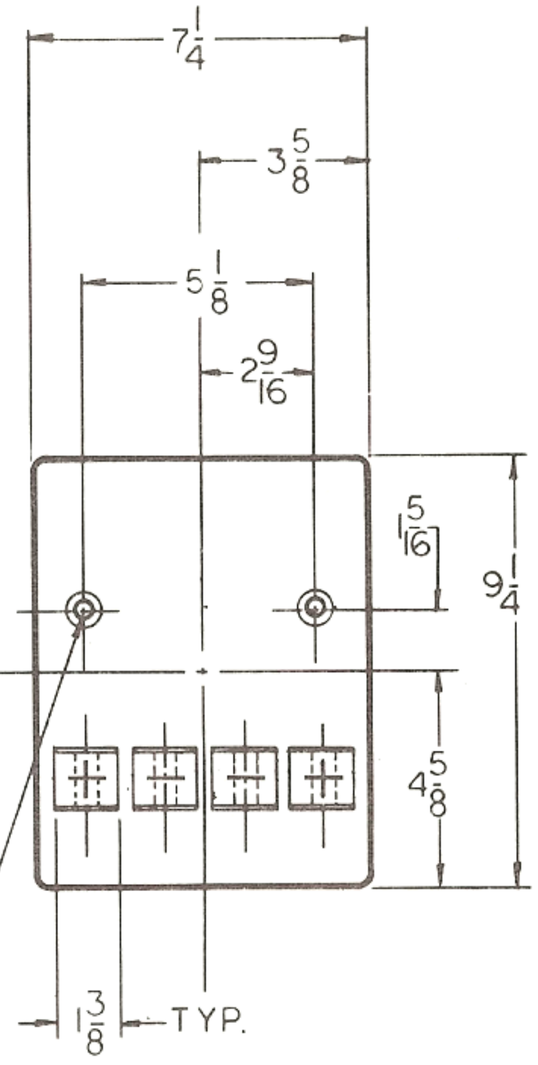

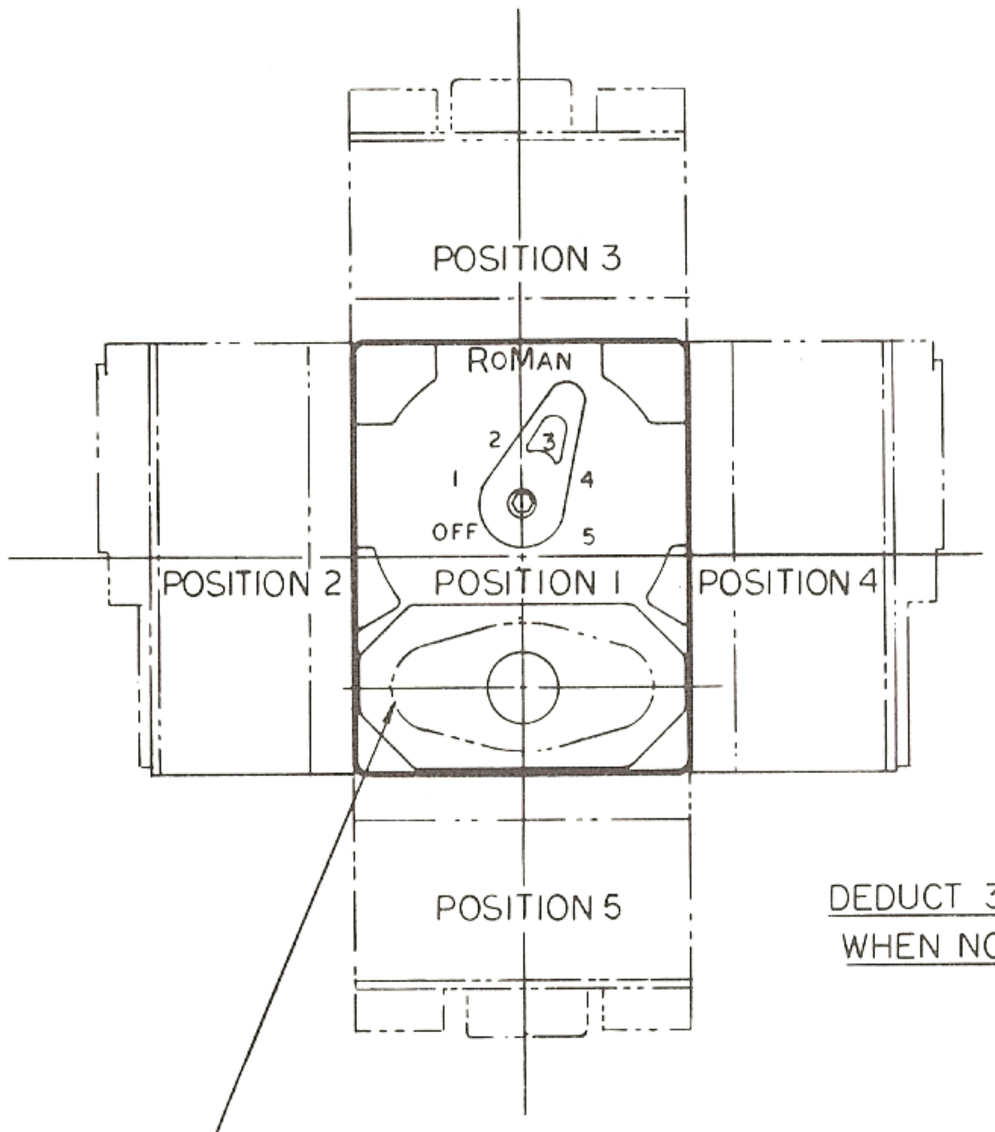

RoMan Manufacturing Inc.

FIXTURE TYPE TRANSFORMER

TAP SWITCH: 5 -WAY MOUNT

FRAME CROSS SECTION: 7 1/4" x 9 1/4"

DRAWING NO. R1300

DATE: DEC., 1982

BULLETIN F-2

Fixture Type Resistance Welding Transformers

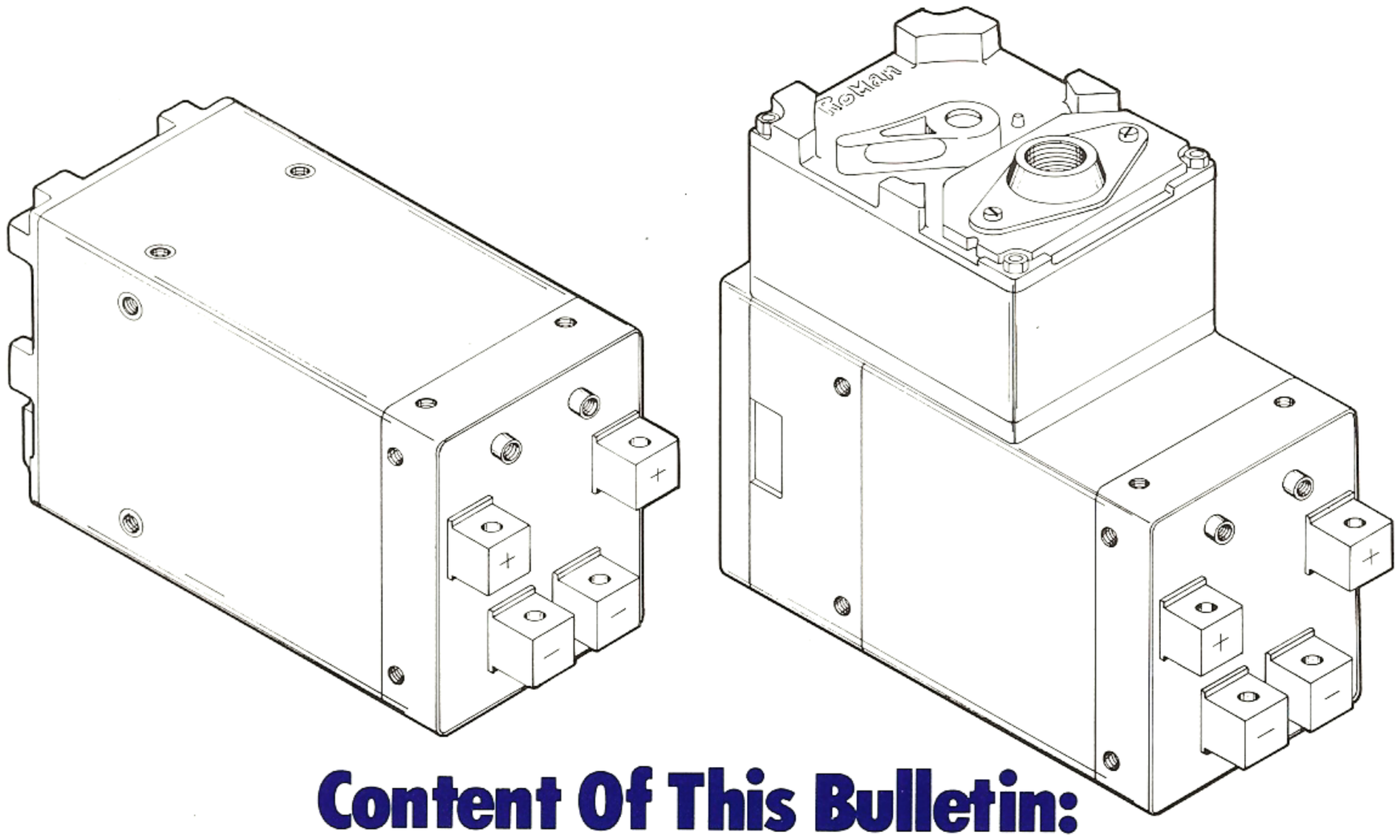

Content Of This Bulletin:

Fixture Type Transformer
Staggered Secondary Lugs
Frame Cross Section 7¼" x 9¼"
Wound Core 60 KVA to 120 KVA
Stacked Core 35 KVA to 65 KVA

Manufacturing Program

Fixture Type Transformers up to 200 KVA	Request "F" Series Bulletin
Portable Gun Type Transformers up to 200 KVA	Request "G" Series Bulletin
Machine Type Transformers up to 500 KVA	Request "M" Series Bulletin
Transgun/Robot Type Transformers	Request "T" Series Bulletin
Special Products	Request "S" Series Bulletin

RoMan Manufacturing Inc.
861 47th Street, S.W., Grand Rapids, MI 49509 (616) 530-8641

General Description:

- Fixture Type Transformer
- Staggered Secondary Lugs
- Frame Cross Section 7¼" x 9¼"

Ordering Instructions:

- Order by model number shown
- Add "X" to model number if transformer is to be fully potted
- Specify primary conduit opening desired 1¼ NPT or 1½ NPT
- Specify tap switch position on 5-way mount models

WOUND CORE

KVA RATING 110°C RISE	SECONDARY VOLTAGE RANGE	TAP SWITCH LOCATION	PRIMARY CONNECTION	MODEL NUMBER		WEIGHT APPROX.	DWG. NO.	FRAME LETTER
				220 V/60 Hz	440 V/60 Hz			
60	3.2 to 5.0 Volts 4 Steps	End Mount	Disconnect Plug Solderless Lug	F22660A1ABW F22660A1BBW	F44660A1ABW F44660A1BBW	137 lbs.	R1288 Page 3	A
		5-Way Mount	Disconnect Plug Solderless Lug	F22660A1CBW F22660A1DBW	F44660A1CBW F44660A1DBW	142 lbs.	R1299 Page 4	
70	4.0 to 6.0 Volts 4 Steps	End Mount	Disconnect Plug Solderless Lug	F22670E1ABW F22670E1BBW	F44670E1ABW F44670E1BBW	153 lbs.	R1288 Page 3	E
		5-Way Mount	Disconnect Plug Solderless Lug	F22670E1CBW F22670E1DBW	F44670E1CBW F44670E1DBW	158 lbs.	R1299 Page 4	
85	5.2 to 7.1 Volts 4 Steps	End Mount	Disconnect Plug Solderless Lug	F22685B1ABW F22685B1BBW	F44685B1ABW F44685B1BBW	173 lbs.	R1288 Page 3	B
		5-Way Mount	Disconnect Plug Solderless Lug	F22685B1CBW F22685B1DBW	F44685B1CBW F44685B1DBW	178 lbs.	R1299 Page 4	
120	6.9 to 9.0 Volts 4 Steps	End Mount	Disconnect Plug Solderless Lug	F226120J1BBW	F446120J1ABW F446120J1BBW	200 lbs.	R1288 Page 3	J
		5-Way Mount	Disconnect Plug Solderless Lug	F226120J1DBW	F446120J1CBW F446120J1DBW	205 lbs.	R1299 Page 4	

STACKED CORE

KVA RATING 110°C RISE	SECONDARY VOLTAGE RANGE	TAP SWITCH LOCATION	PRIMARY CONNECTION	MODEL NUMBER		WEIGHT APPROX.	DWG. NO.	FRAME LETTER
				220 V/60 Hz	440 V/60 Hz			
35	2.4 to 3.5 Volts 4 Steps	End Mount	Disconnect Plug Solderless Lug	F22635A1ABL F22635A1BBL	F44635A1ABL F44635A1BBL	143 lbs.	R1288 Page 3	A
		5-Way Mount	Disconnect Plug Solderless Lug	F22635A1CBL F22635A1DBL	F44635A1CBL F44635A1DBL	148 lbs.	R1299 Page 4	
45	2.9 to 4.2 Volts 4 Steps	End Mount	Disconnect Plug Solderless Lug	F22645E1ABL F22645E1BBL	F44645E1ABL F44645E1BBL	165 lbs.	R1288 Page 3	E
		5-Way Mount	Disconnect Plug Solderless Lug	F22645E1CBL F22645E1DBL	F44645E1CBL F44645E1DBL	170 lbs.	R1299 Page 4	
55	3.2 to 5.2 Volts 4 Steps	End Mount	Disconnect Plug Solderless Lug	F22655B1ABL F22655B1BBL	F44655B1ABL F44655B1BBL	182 lbs.	R1288 Page 3	B
		5-Way Mount	Disconnect Plug Solderless Lug	F22655B1CBL F22655B1DBL	F44655B1CBL F44655B1DBL	187 lbs.	R1299 Page 4	
65	4.5 to 6.5 Volts 4 Steps	End Mount	Disconnect Plug Solderless Lug	F22665J1ABL F22665J1BBL	F44665J1ABL F44665J1BBL	225 lbs.	R1288 Page 3	J
		5-Way Mount	Disconnect Plug Solderless Lug	F22665J1CBL F22665J1DBL	F44665J1CBL F44665J1DBL	230 lbs.	R1299 Page 4	

Standard Features:

- Class "F" insulation
- Totally enclosed tap switch
- Secondary end positively sealed against contamination
- Blade type plug if applicable
- Interchangable with other manufacturers

Optional Features:

- Voltages and frequencies other than shown available on request
- Thermostats
- Pin type plug

FRAME LETTER	DIM. "A"	DIM. "B"
A	16.59	8.00
E	17.96	9.12
B	19.34	11.00
J	21.34	12.75

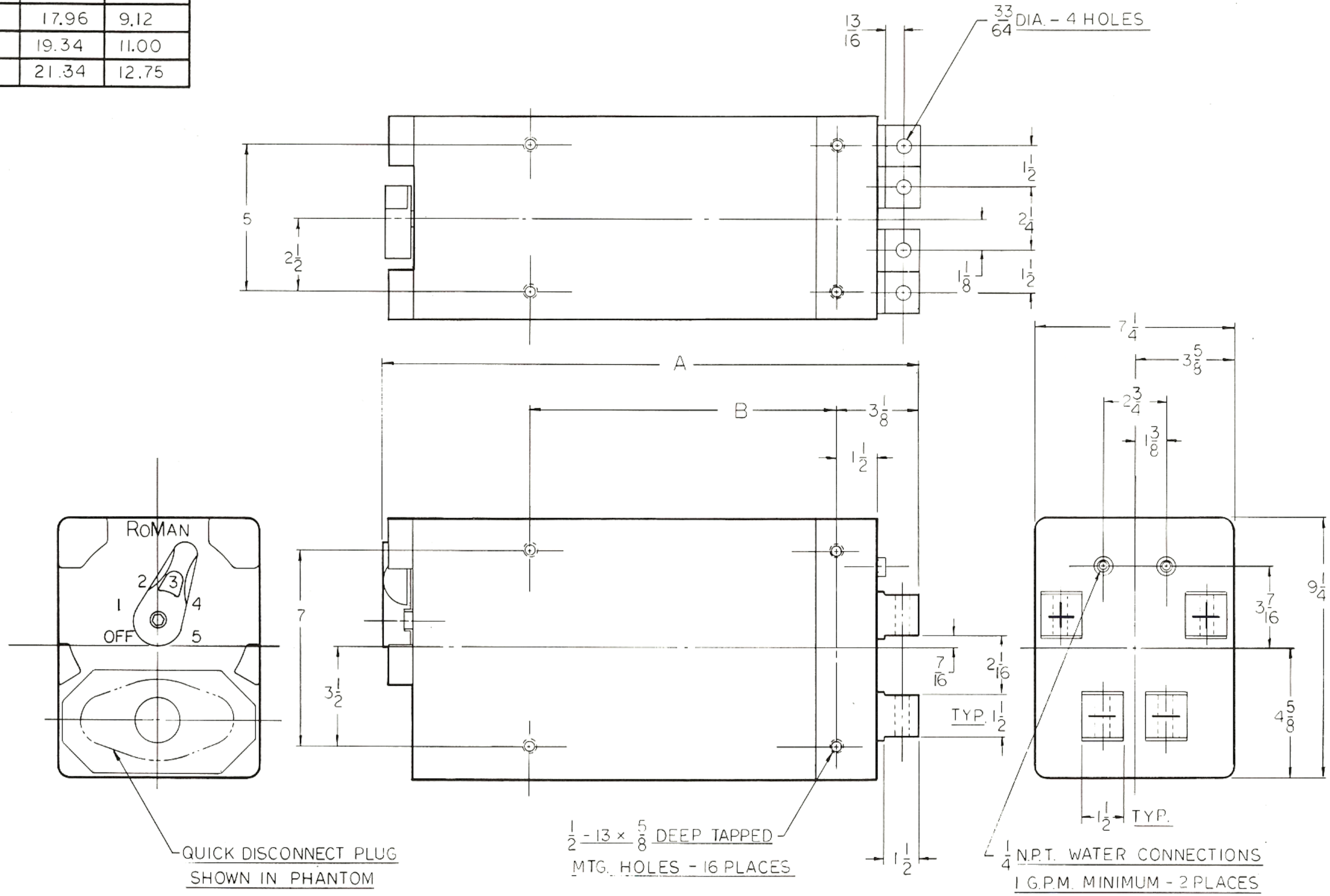

RoMan Manufacturing Inc.

FIXTURE TYPE TRANSFORMER

TAP SWITCH: END MOUNT

FRAME CROSS SECTION: $7\frac{1}{4}" \times 9\frac{1}{4}"$

DRAWING NO. R1288

DATE: NOV., 1982

FRAME LETTER	DIM. "A"	DIM. "B"
A	18.18	8.00
E	19.31	9.12
B	21.18	11.00
J	22.87	12.75

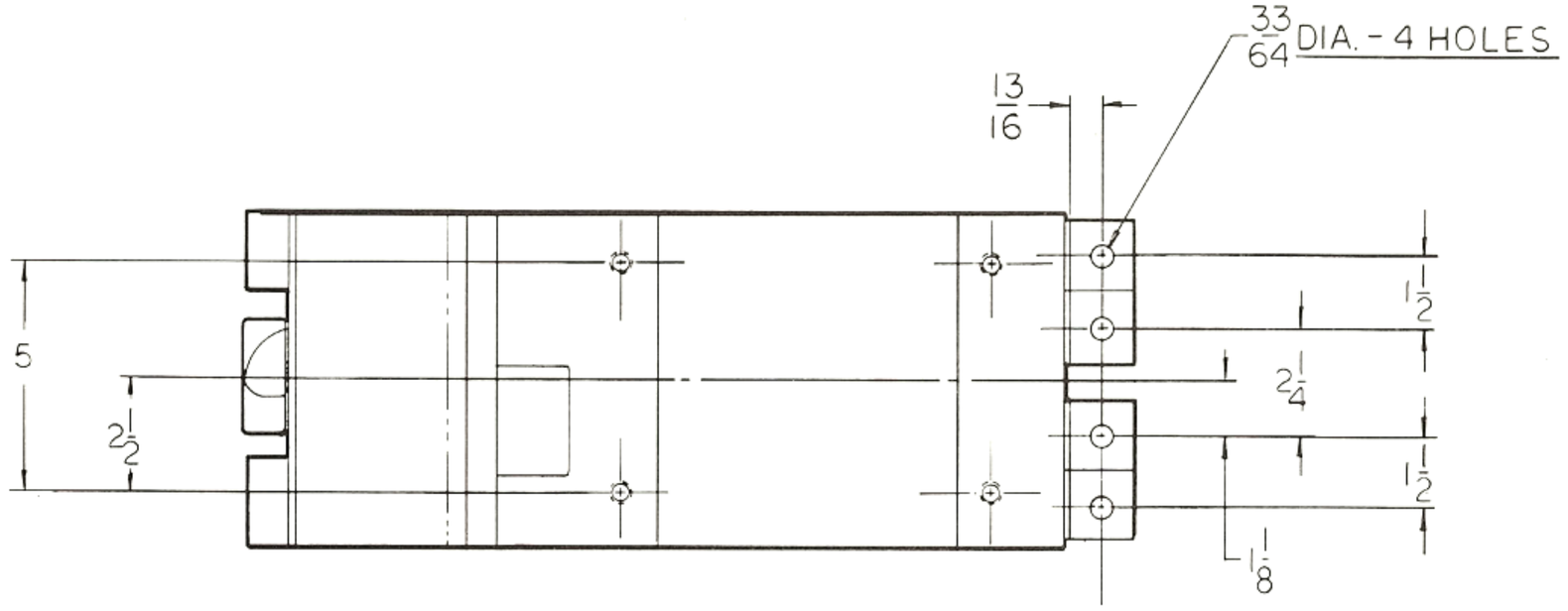

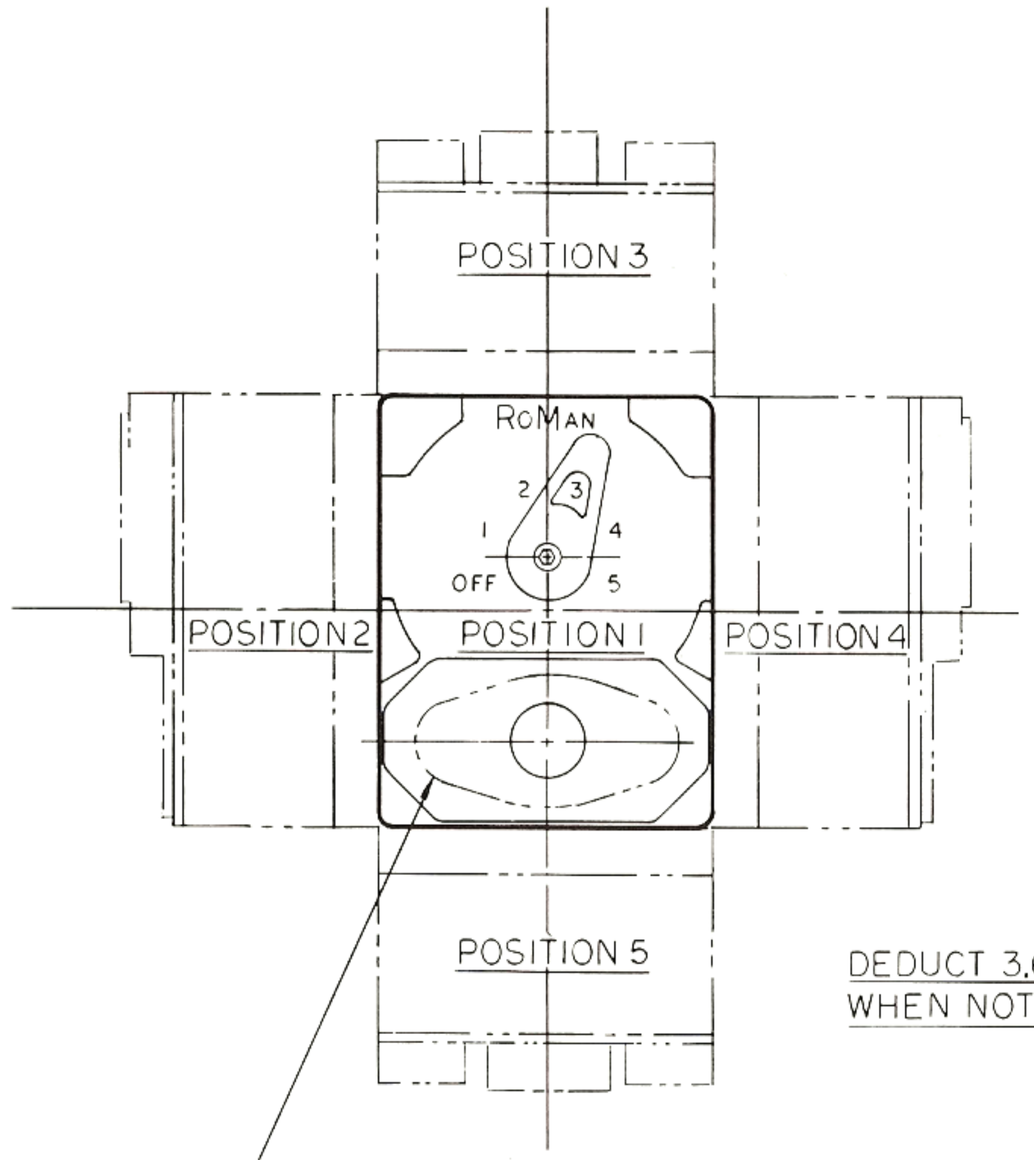

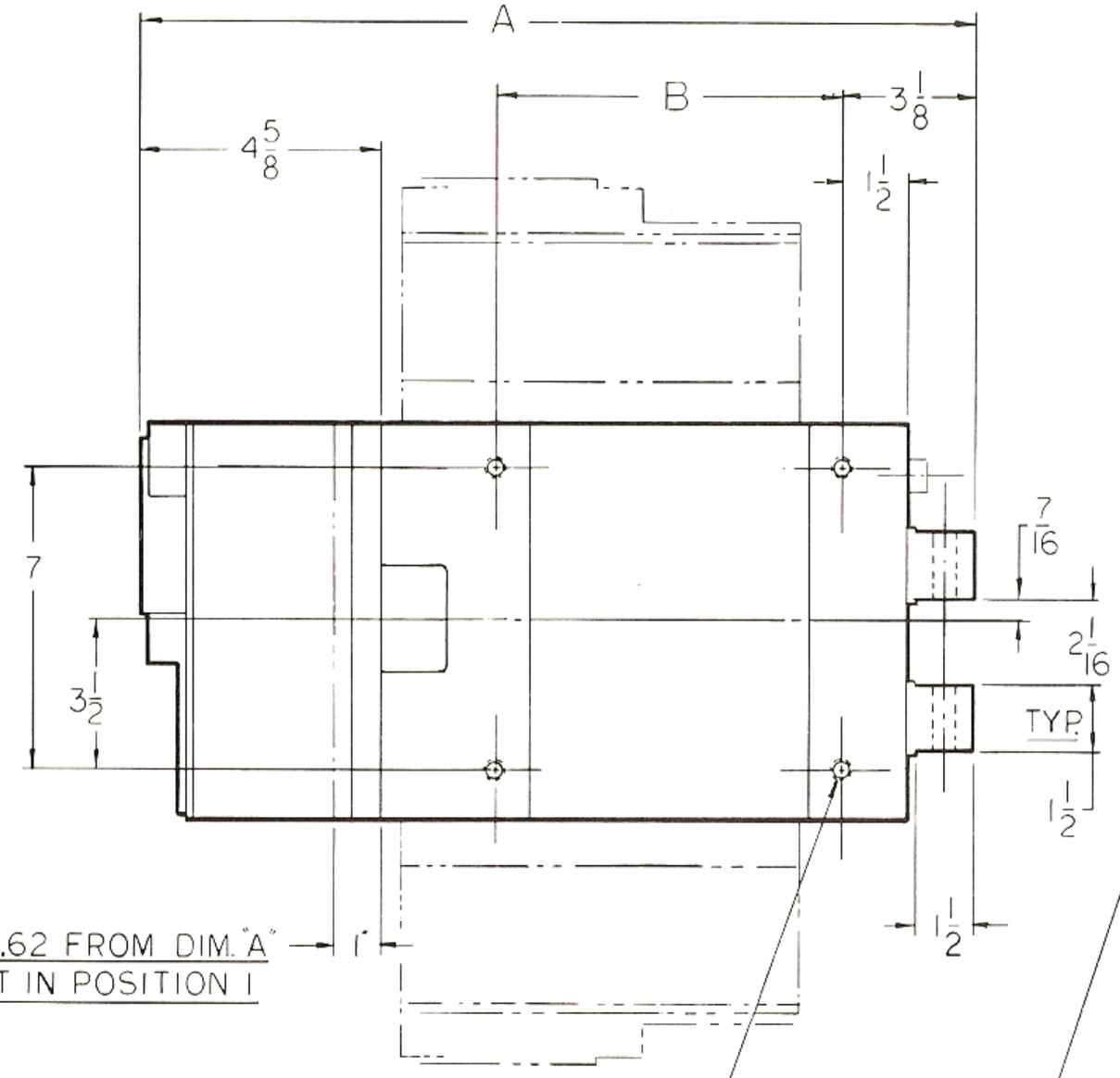

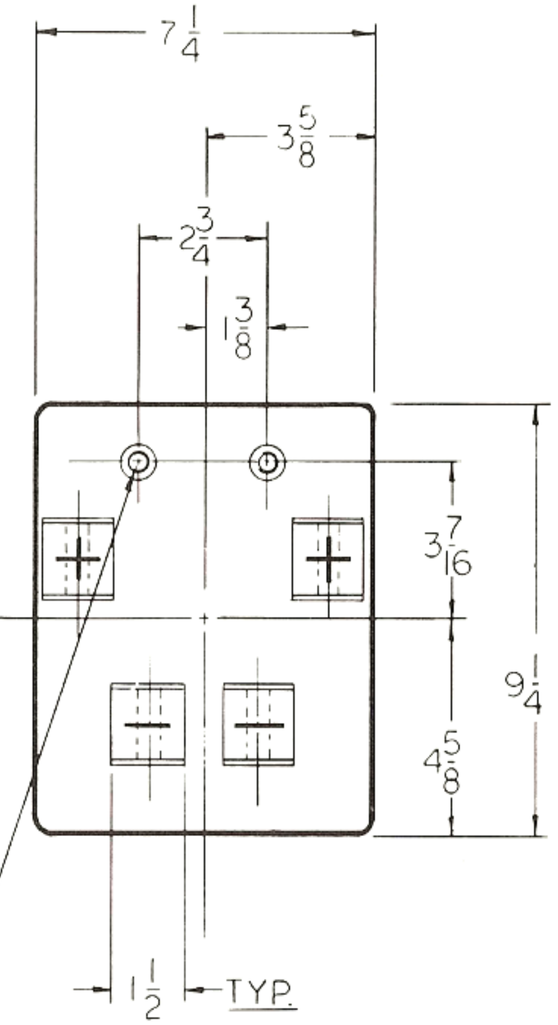

QUICK DISCONNECT PLUG SHOWN IN PHANTOM

DEDUCT 3.62 FROM DIM. "A" WHEN NOT IN POSITION 1

1/2-13 x 5/8 DEEP TAPPED MTG. HOLES - 16 PLACES

1/4 N.P.T. WATER CONNECTIONS 1 G.P.M. MINIMUM - 2 PLACES

RoMan Manufacturing Inc.

FIXTURE TYPE TRANSFORMER

TAP SWITCH: 5-WAY MOUNT

FRAME CROSS SECTION: 7 1/4" x 9 1/4"

DRAWING NO. R1299

DATE: DEC. 1982

BULLETIN F-2.1

Fixture Type Resistance Welding Transformers

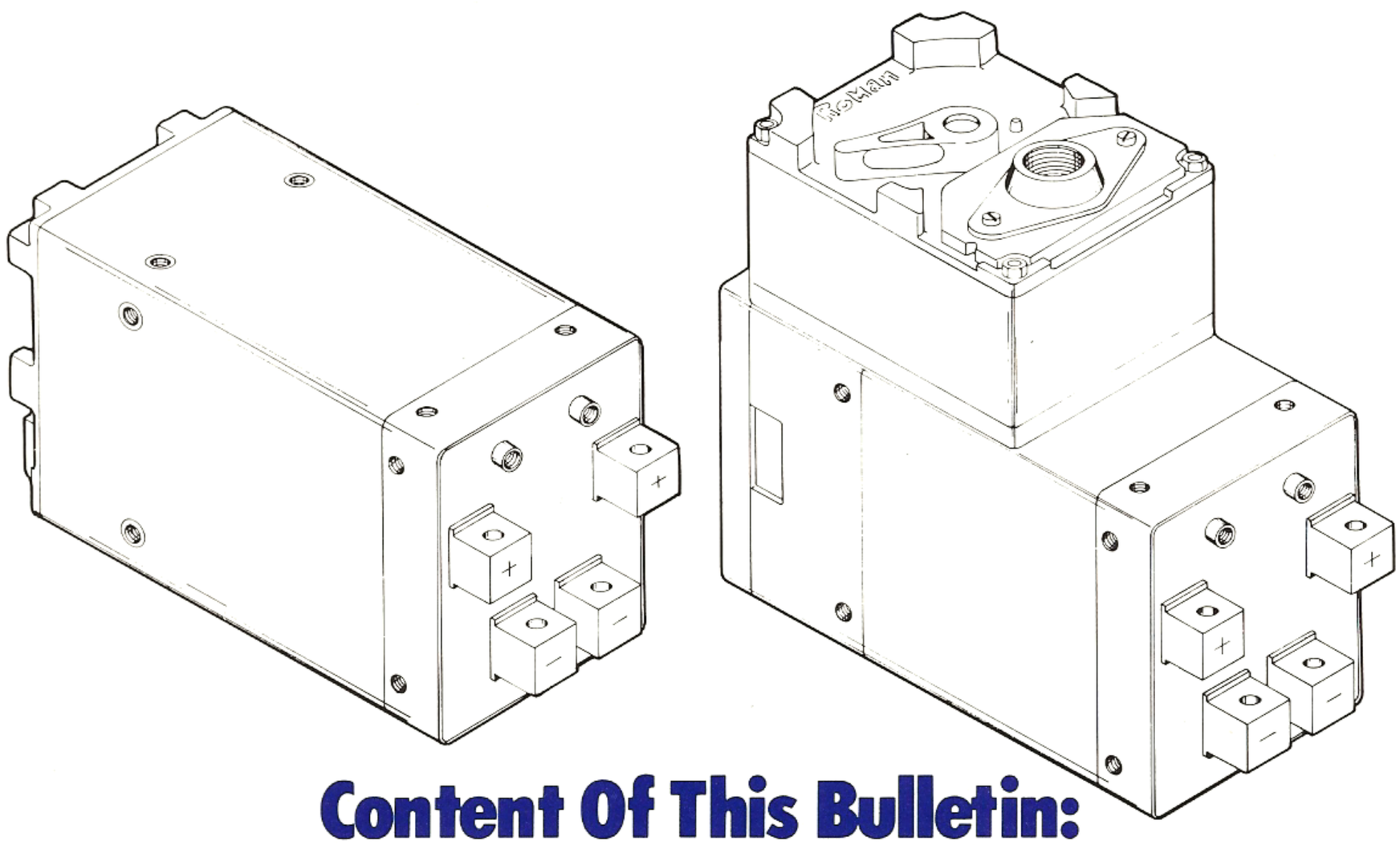

Content Of This Bulletin:

Fixture Type Transformer
Staggered Secondary Lugs RWMA
Frame Cross Section 7¼" x 9¼"
Wound Core 60 KVA to 120 KVA
Stacked Core 35 KVA to 65 KVA

Manufacturing Program

Fixture Type Transformers up to 200 KVA	Request "F" Series Bulletin
Portable Gun Type Transformers up to 200 KVA	Request "G" Series Bulletin
Machine Type Transformers up to 500 KVA	Request "M" Series Bulletin
Transgun/Robot Type Transformers	Request "T" Series Bulletin
Special Products	Request "S" Series Bulletin

RoMan
Manufacturing Inc.
861 47th Street, S.W., Grand Rapids, MI 49509 (616) 530-8641

General Description:

- Fixture Type Transformer
- Staggered Secondary Lugs RWMA
- Frame Cross Section 7¼" x 9¼"

Ordering Instructions:

- Order by model number shown
- Add "X" to model number if transformer is to be fully potted
- Specify primary conduit opening desired 1¼ NPT or 1½ NPT
- Specify tap switch position on 5-way mount models

WOUND CORE

KVA RATING 110°C RISE	SECONDARY VOLTAGE RANGE	TAP SWITCH LOCATION	PRIMARY CONNECTION	MODEL NUMBER		WEIGHT APPROX.	DWG. NO.	FRAME LETTER
				220 V/60 Hz	440 V/60 Hz			
60	3.2 to 5.0 Volts 4 Steps	End Mount	Disconnect Plug Solderless Lug	F22660A1AEW F22660A1BEW	F44660A1AEW F44660A1BEW	137 lbs.	R1382 Page 3	A
		5-Way Mount	Disconnect Plug Solderless Lug	F22660A1CEW F22660A1DEW	F44660A1CEW F44660A1DEW	142 lbs.	R1383 Page 4	
70	4.0 to 6.0 Volts 4 Steps	End Mount	Disconnect Plug Solderless Lug	F22670E1AEW F22670E1BEW	F44670E1AEW F44670E1BEW	153 lbs.	R-1382 Page 3	E
		5-Way Mount	Disconnect Plug Solderless Lug	F22670E1CEW F22670E1DEW	F44670E1CEW F44670E1DEW	158 lbs.	R1383 Page 4	
85	5.2 to 7.1 Volts 4 Steps	End Mount	Disconnect Plug Solderless Lug	F22685B1AEW F22685B1BEW	F44685B1AEW F44685B1BEW	173 lbs.	R-1382 Page 3	B
		5-Way Mount	Disconnect Plug Solderless Lug	F22685B1CEW F22685B1DEW	F44685B1CEW F44685B1DEW	178 lbs.	R1383 Page 4	
120	6.7 to 9.0 Volts 4 Steps	End Mount	Disconnect Plug Solderless Lug	F226120J1BEW	F446120J1AEW F446120J1BEW	200 lbs.	R1382 Page 3	J
		5-Way Mount	Disconnect Plug Solderless Lug	F226120J1DEW	F446120J1CEW F446120J1DEW	205 lbs.	R1383 Page 4	

STACKED CORE

KVA RATING 110°C RISE	SECONDARY VOLTAGE RANGE	TAP SWITCH LOCATION	PRIMARY CONNECTION	MODEL NUMBER		WEIGHT APPROX.	DWG. NO.	FRAME LETTER
				220 V/60 Hz	440 V/60 Hz			
35	2.4 to 3.5 Volts 4 Steps	End Mount	Disconnect Plug Solderless Lug	F22635A1AEL F22635A1BEL	F44635A1AEL F44635A1BEL	143 lbs.	R1382 Page 3	A
		5-Way Mount	Disconnect Plug Solderless Lug	F22635A1CEL F22635A1DEL	F44635A1CEL F44635A1DEL	148 lbs.	R1383 Page 4	
45	2.9 to 4.2 Volts 4 Steps	End Mount	Disconnect Plug Solderless Lug	F22645E1AEL F22645E1BEL	F44645E1AEL F44645E1BEL	165 lbs.	R1382 Page 3	E
		5-Way Mount	Disconnect Plug Solderless Lug	F22645E1CEL F22645E1DEL	F44645E1CEL F44645E1DEL	170 lbs.	R1383 Page 4	
55	3.2 to 5.2 Volts 4 Steps	End Mount	Disconnect Plug Solderless Lug	F22655B1AEL F22655B1BEL	F44655B1AEL F44655B1BEL	182 lbs.	R1382 Page 3	B
		5-Way Mount	Disconnect Plug Solderless Lug	F22655B1CEL F22655B1DEL	F44655B1CEL F44655B1DEL	187 lbs.	R1383 Page 4	
65	4.5 to 6.5 Volts 4 Steps	End Mount	Disconnect Plug Solderless Lug	F22665J1AEL F22665J1BEL	F44665J1AEL F44665J1BEL	225 lbs.	R1382 Page 3	J
		5-Way Mount	Disconnect Plug Solderless Lug	F22665J1CEL F22665J1DEL	F44665J1CEL F44665J1DEL	230 lbs.	R1383 Page 4	

Standard Features:

- Class "F" insulation
- Totally enclosed tap switch
- Secondary end positively sealed against contamination
- Blade type plug if applicable
- Interchangable with other manufacturers

Optional Features:

- Voltages and frequencies other than shown available on request
- Thermostats
- Pin type plug

FRAME LETTER	DIM. "A"	DIM. "B"
A	16.59	8.00
E	17.96	9.12
B	19.34	11.00
J	21.34	12.75

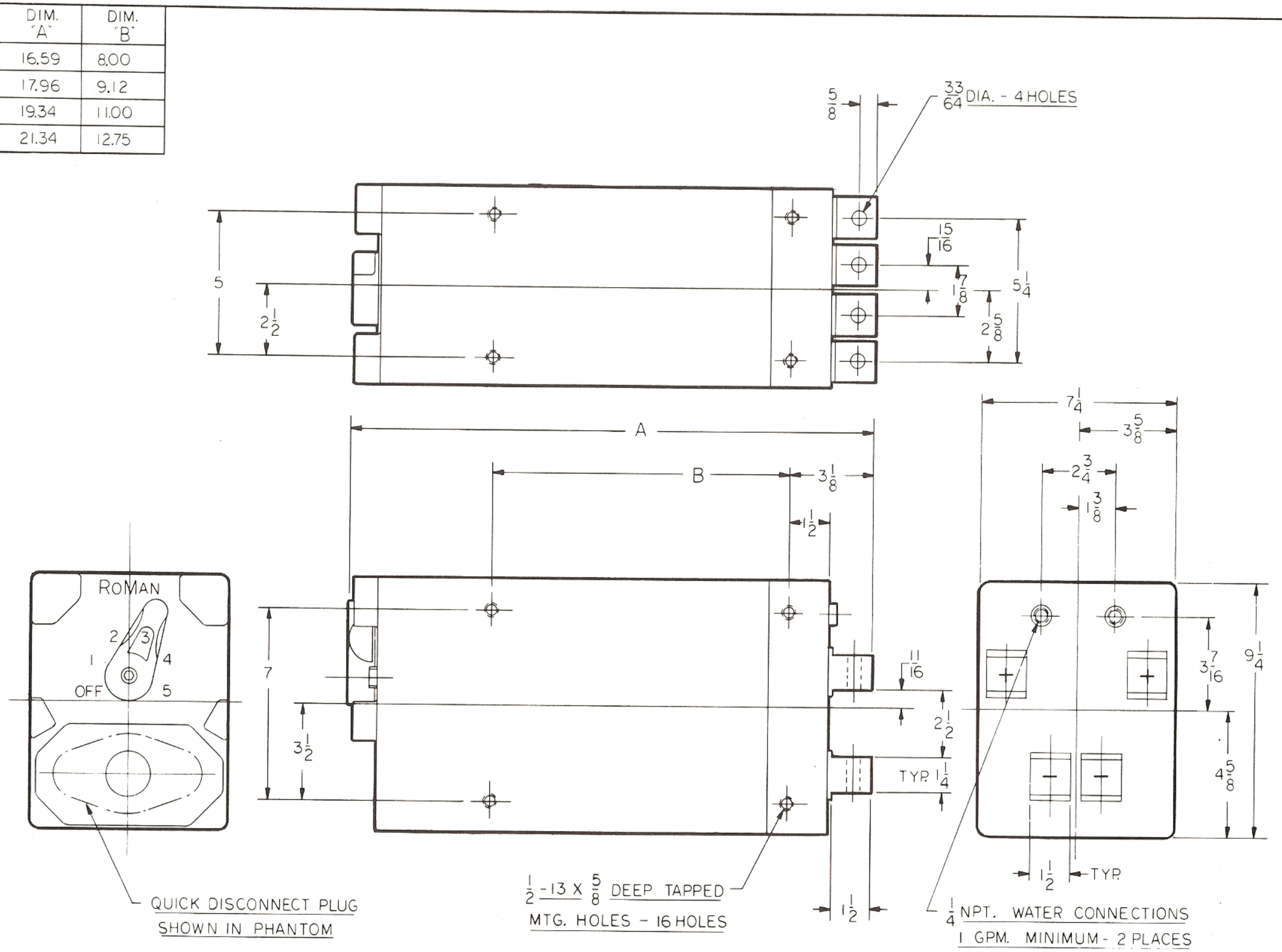

RoMan Manufacturing Inc.

FIXTURE TYPE TRANSFORMER

TAP SWITCH - END MOUNT

FRAME CROSS SECTION - $7\frac{1}{4}$" X $9\frac{1}{4}$"

DRAWING NO. R1382
DATE - AUG. 12, 1984

FRAME LETTER	DIM "A"	DIM "B"
A	18.18	8.00
E	19.31	9.12
B	21.18	11.00
J	22.87	12.75

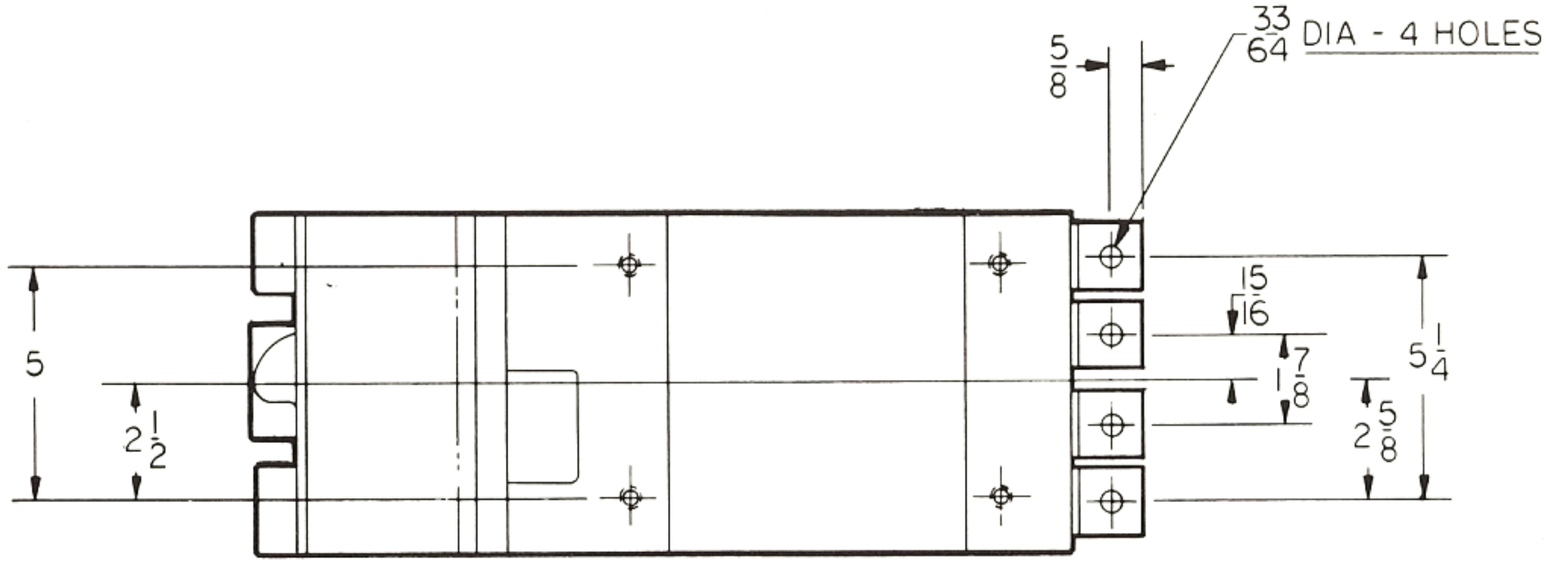

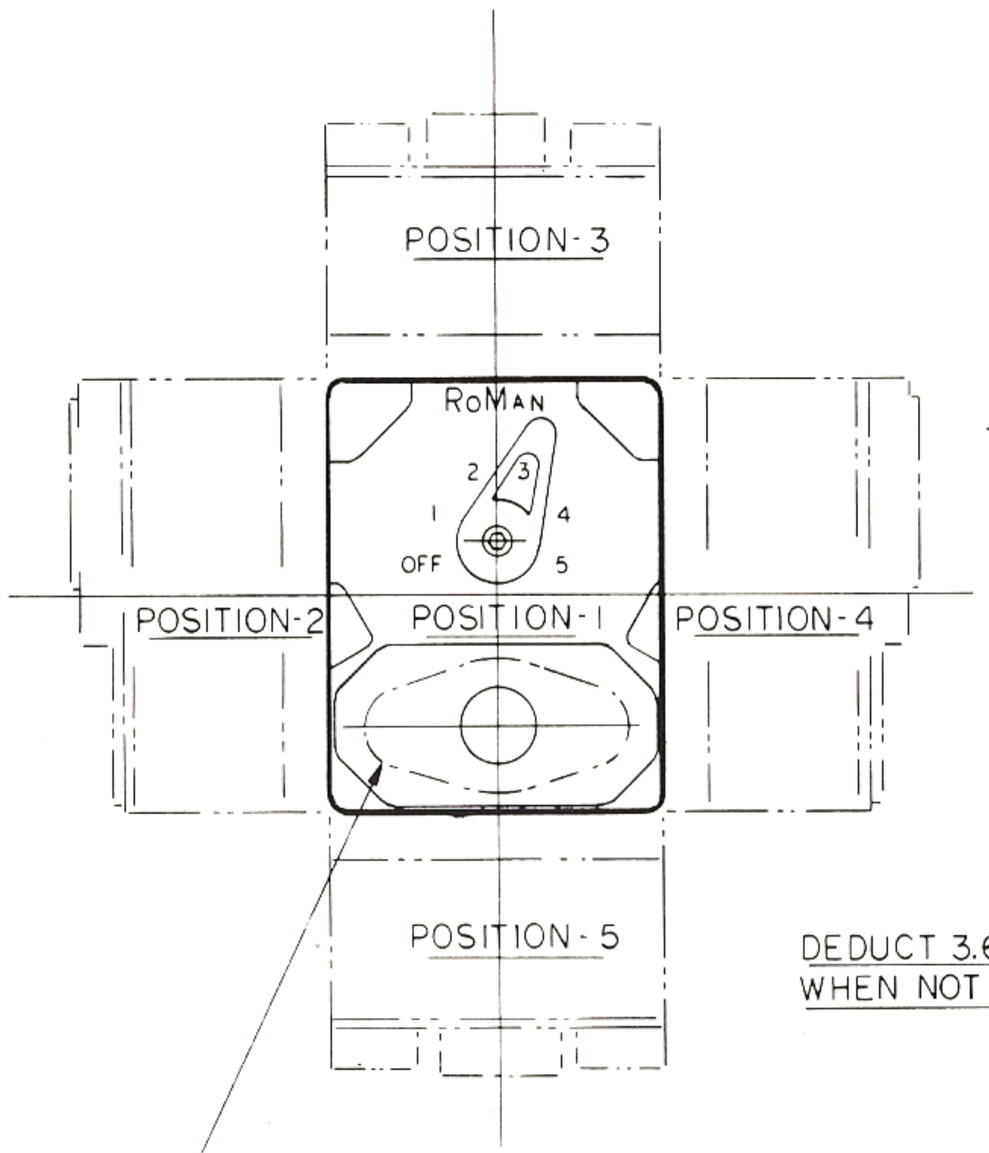

QUICK DISCONNECT PLUG
SHOWN IN PHANTOM

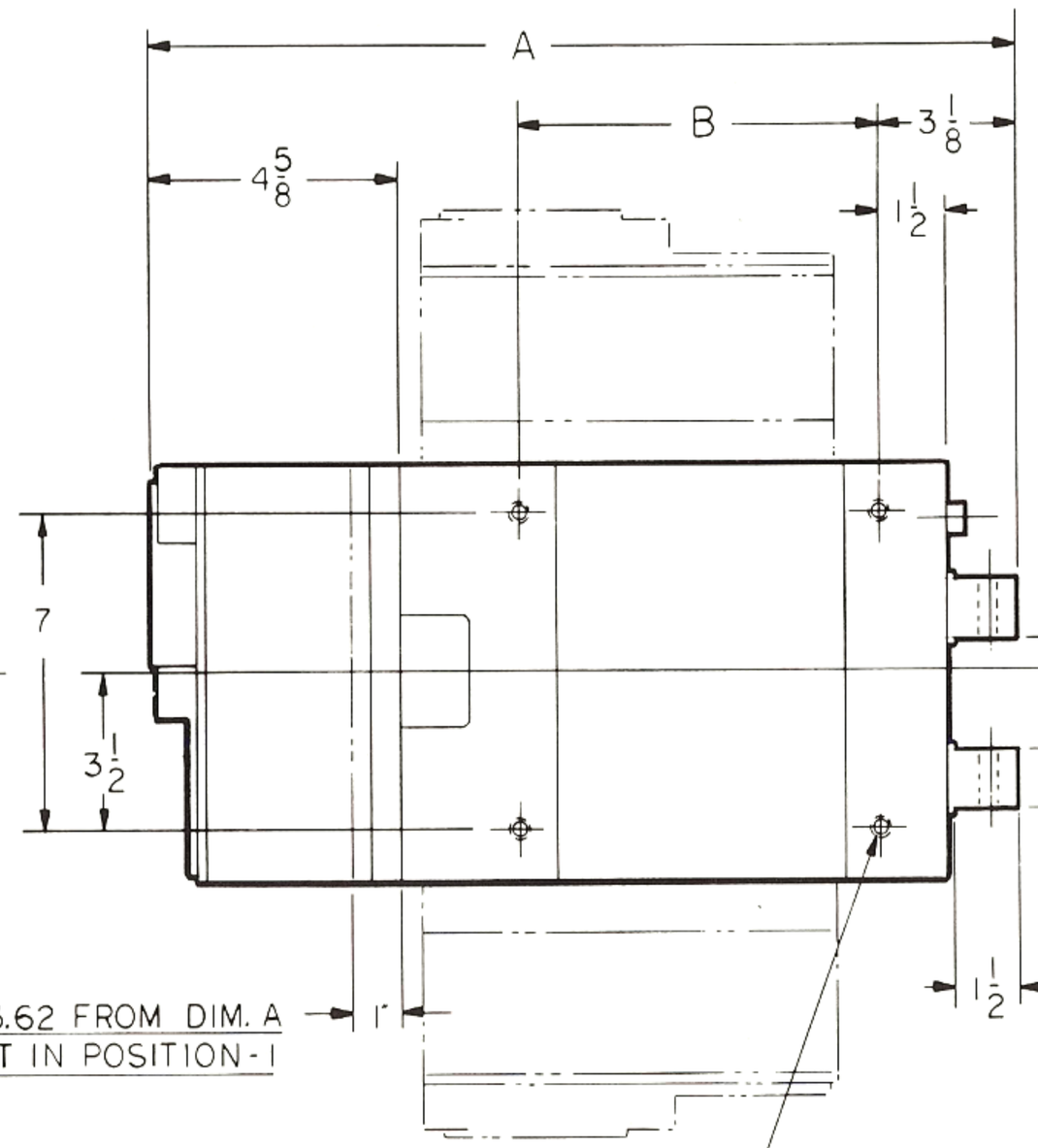

DEDUCT 3.62 FROM DIM. A
WHEN NOT IN POSITION-1

1/2-13 X 5/8 DEEP TAPPED
MTG. HOLES - 16 PLACES

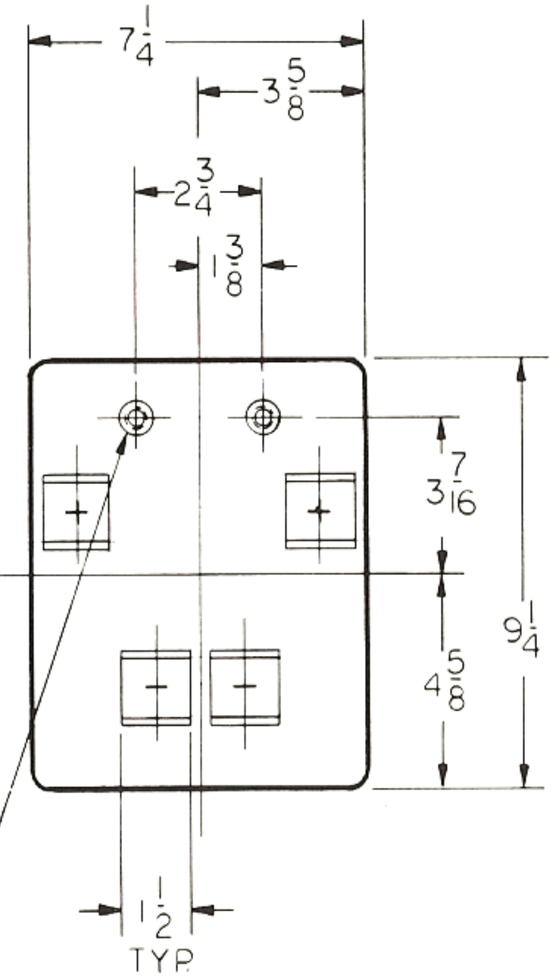

1/4 NPT. WATER CONNECTIONS
1 GPM. MINIMUM - 2 PLACES

RoMan Manufacturing Inc.

FIXTURE TYPE TRANSFORMER

TAP SWITCH 5-WAY MOUNT

FRAME CROSS-SECTION $7\frac{1}{4}$" X $9\frac{1}{4}$"

DRAWING NO. R1383

DATE - AUG . 13, 1984

BULLETIN F-2.2

Fixture Type Resistance Welding Transformers

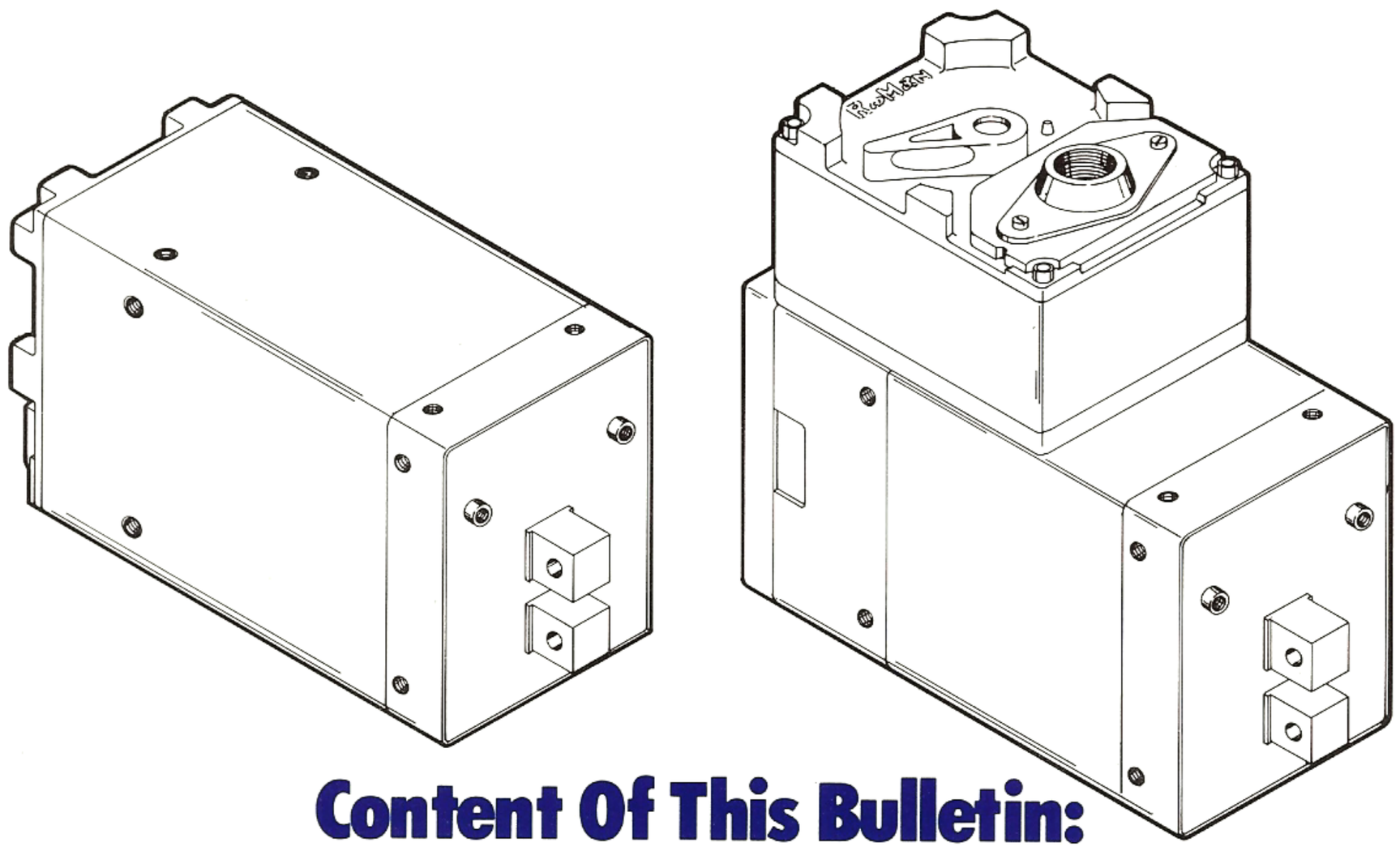

Content Of This Bulletin:

Fixture Type Transformer
Internally Paralleled (2-Lug)
Frame Cross Section 7¼ x 9¼

Wound Core 60 KVA to 120 KVA
Stacked Core 35 KVA to 65 KVA

Manufacturing Program

Fixture Type Transformers up to 200 KVA	Request "F" Series Bulletin
Portable Gun Type Transformers up to 200 KVA	Request "G" Series Bulletin
Machine Type Transformers up to 500 KVA	Request "M" Series Bulletin
Transgun/Robot Type Transformers	Request "T" Series Bulletin
Special Products	Request "S" Series Bulletin

RoMan Manufacturing Inc.
861 47th Street, S.W., Grand Rapids, MI 49509 Phone (616) 530-8641 FAX (616) 530-8953

General Description:

- Fixture Type Transformer
- Internally Paralleled Secondary
- Frame Cross Section 7¼" x 9¼"

Ordering Instructions:

- Order by model number shown
- Add "X" to model number if transformer is to be fully potted
- Specify primary conduit opening desired 1¼ NPT or 1½ NPT
- Specify tap switch position on 5-way mount models

WOUND CORE

KVA RATING 110°C RISE	SECONDARY VOLTAGE RANGE	TAP SWITCH LOCATION	PRIMARY CONNECTION	MODEL NUMBER		WEIGHT APPROX.	DWG. NO.	FRAME LETTER
				220V/60 Hz	440 V/60 Hz			
60	3.2 to 5.0 Volts 4 Steps	End Mount	Disconnect Plug Solderless Lug	F22660A1ACW F22660A1BCW	F44660A1ACW F44660A1BCW	137 lbs.	R1885 Page 3	A
		5-Way Mount	Disconnect Plug Solderless Lug	F22660A1CCW F22660A1DCW	F44660A1CCW F44660A1DCW	142 lbs.	R1886 Page 4	
70	4.0 to 6.0 Volts 4 Steps	End Mount	Disconnect Plug Solderless Lug	F22670E1ACW F22670E1BCW	F44670E1ACW F44670E1BCW	152 lbs.	R1885 Page 3	E
		5-Way Mount	Disconnect Plug Solderless Lug	F22670E1CCW F22670E1DCW	F44670E1CCW F44670E1DCW	158 lbs.	R1886 Page 4	
85	5.2 to 7.1 Volts 4 Steps	End Mount	Disconnect Plug Solderless Lug	F22685B1ACW F22685B1BCW	F44685B1ACW F44685B1BCW	173 lbs.	R1885 Page 3	B
		5-Way Mount	Disconnect Plug Solderless Lug	F22685B1CCW F22685B1DCW	F44685B1CCW F44685B1DCW	178 lbs.	R1886 Page 4	
120	6.9 to 9.0 Volts 4 Steps	End Mount	Disconnect Plug Solderless Lug	F226120J1BCW	F446120J1ACW F446120J1BCW	200 lbs.	R1885 Page 3	J
		5-Way Mount	Disconnect Plug Solderless Lug	F226120J1DCW	F446120J1CCW F446120J1DCW	205 lbs.	R1886 Page 4	

STACKED CORE

KVA RATING 110°C RISE	SECONDARY VOLTAGE RANGE	TAP SWITCH LOCATION	PRIMARY CONNECTION	MODEL NUMBER		WEIGHT APPROX.	DWG. NO.	FRAME LETTER
				220V/60 Hz	440 V/60 Hz			
35	2.4 to 3.5 Volts 4 Steps	End Mount	Disconnect Plug Solderless Lug	F22635A1ACL F22635A1BCL	F44635A1ACL F44635A1BCL	143 lbs.	R1885 Page 3	A
		5-Way Mount	Disconnect Plug Solderless Lug	F22635A1CCL F22635A1DCL	F44635A1CCL F44635A1DCL	148 lbs.	R1886 Page 4	
45	2.9 to 4.2 Volts 4 Steps	End Mount	Disconnect Plug Solderless Lug	F22645E1ACL F22645E1BCL	F44645E1ACL F44645E1BCL	165 lbs.	R1885 Page 3	E
		5-Way Mount	Disconnect Plug Solderless Lug	F22645E1CCL F22645E1DCL	F44645E1CCL F44645E1DCL	170 lbs.	R1886 Page 4	
55	3.2 to 5.2 Volts 4 Steps	End Mount	Disconnect Plug Solderless Lug	F22655B1ACL F22655B1BCL	F44655B1ACL F44655B1BCL	182 lbs.	R1885 Page 3	B
		5-Way Mount	Disconnect Plug Solderless Lug	F22655B1CCL F22655B1DCL	F44655B1CCL F44655B1DCL	187 lbs.	R1886 Page 4	
65	4.5 to 6.5 Volts 4 Steps	End Mount	Disconnect Plug Solderless Lug	F22665J1ACL F22665J1BCL	F44665J1ACL F44665J1BCL	225 lbs.	R1885 Page 3	J
		5-Way Mount	Disconnect Plug Solderless Lug	F22665J1DCL	F44665J1CCL F44665J1DCL	230 lbs.	R1886 Page 4	

Standard Features:

- Class "F" insulation
- Totally enclosed tap switch
- Secondary end positively sealed against contamination
- Blade type plug if applicable
- Interchangable with other manufacturers

Optional Features:

- Voltages and frequencies other than shown available on request
- Thermostats
- Pin type plug

FRAME LETTER	DIM A	DIM B
A	16.59	8.00
E	17.96	9.12
B	19.34	11.00
J	21.34	12.75

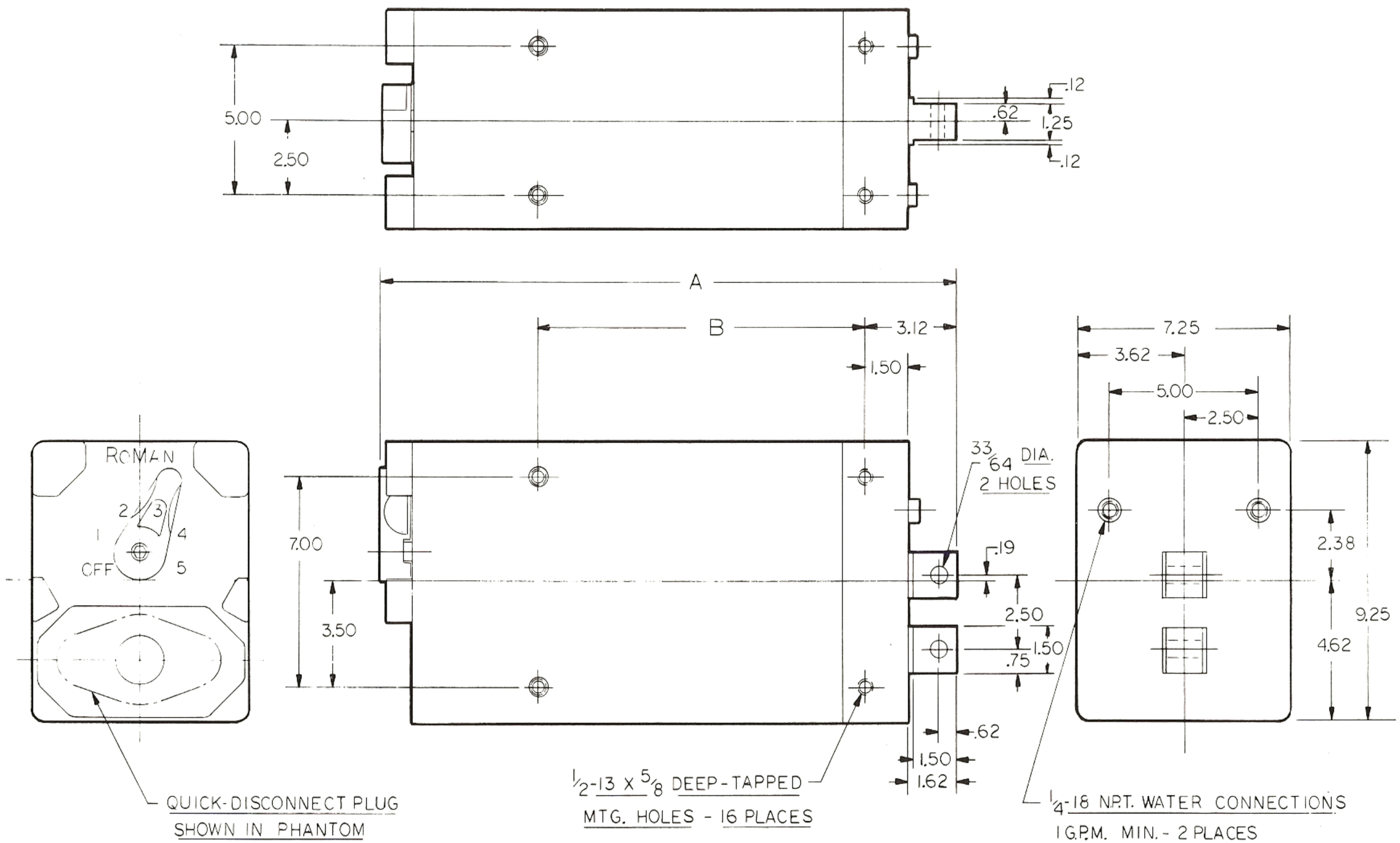

RoMan Manufacturing Inc.

FIXTURE TYPE TRANSFORMER

END-MOUNT TAP-SWITCH INTERNALLY-PARALLELED

FRAME CROSS-SECTION 7 1/4 X 9 1/4

DRAWING NO. R-1885

DATE: JAN, 1988

FRAME LETTER	DIM A	DIM B
A	18.18	8.00
E	19.31	9.12
B	21.18	11.00
J	22.87	12.75

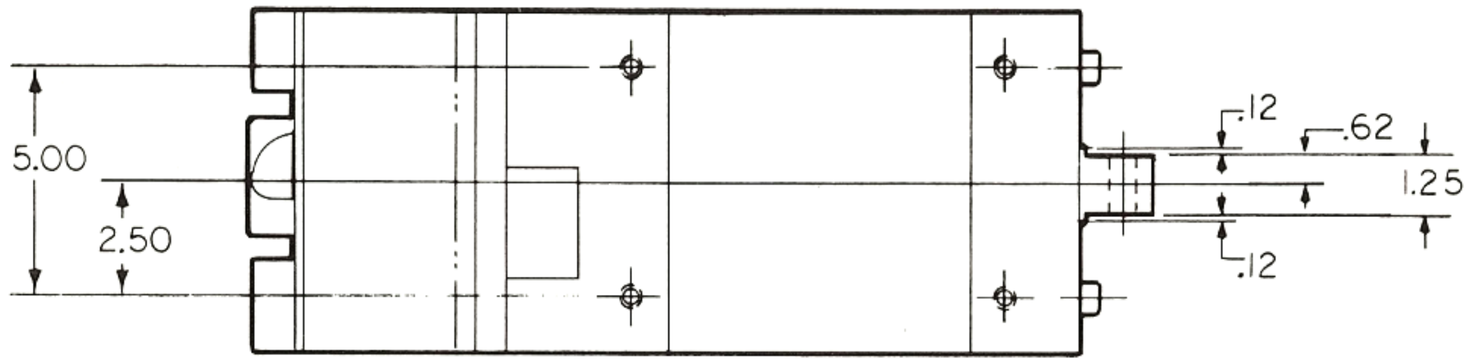

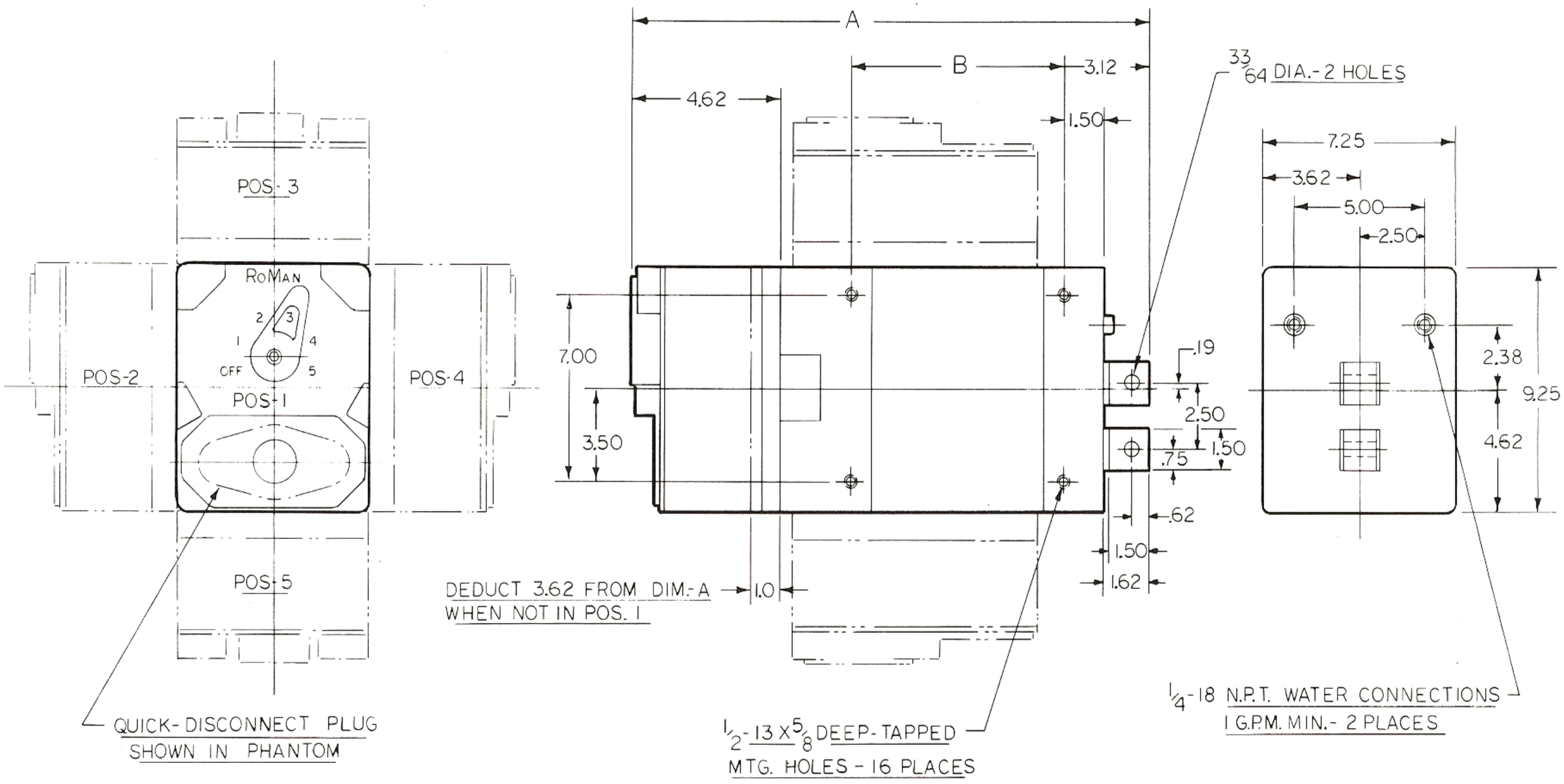

RoMan Manufacturing Inc.

FIXTURE TYPE TRANSFORMER

5-WAY MOUNTED TAP-SWITCH INTERNALLY-PARALLELED
FRAME CROSS SECTION 7 1/4 X 9 1/4

DRAWING NO. R-1886
DATE: JAN, 1988

BULLETIN F-3

Fixture Type Resistance Welding Transformers

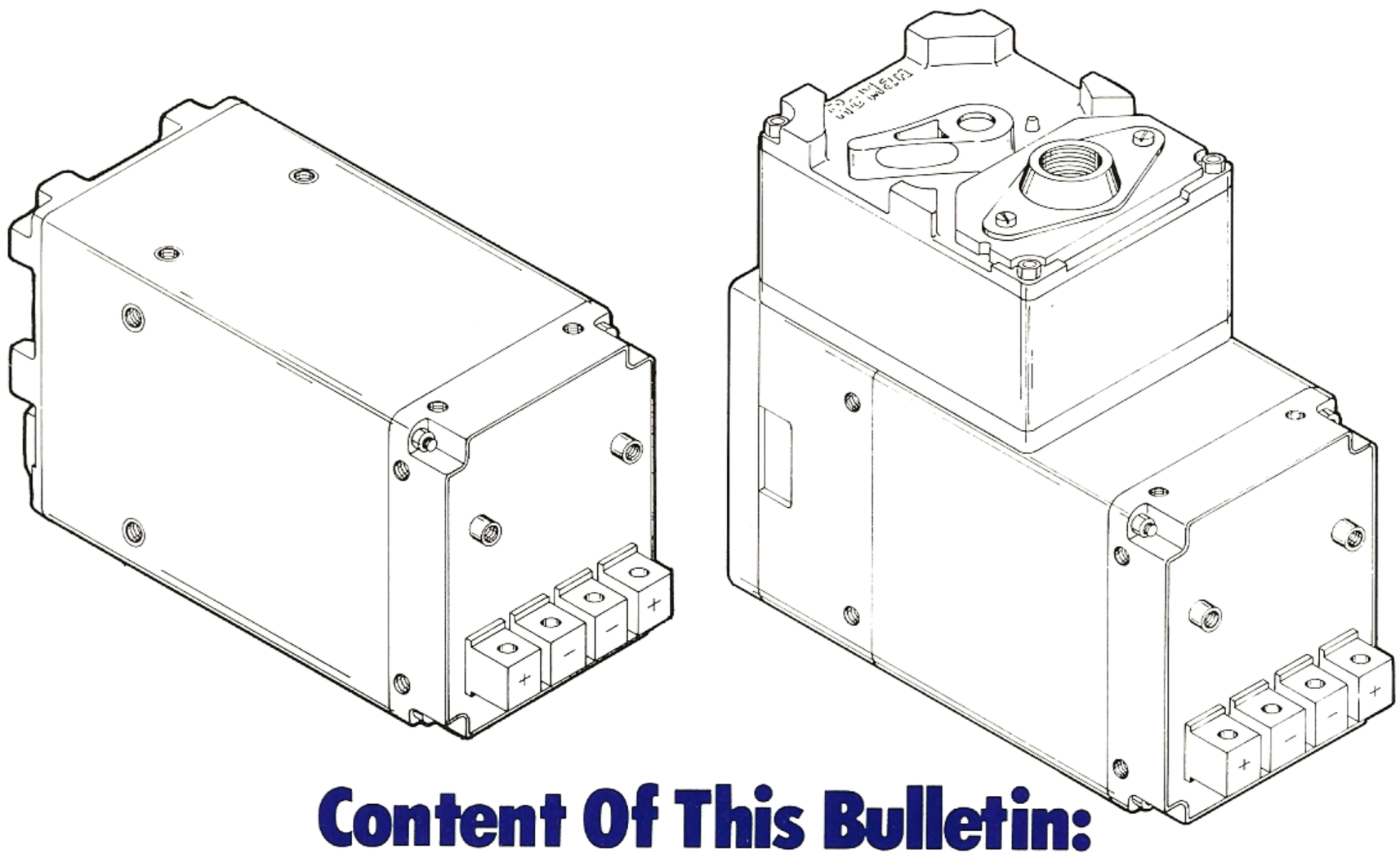

Content Of This Bulletin:

Fixture Type Transformer
Inline Secondary Lugs RWMA
Frame Cross Section 7¾" x 10¼"
Wound Core 120 KVA to 150 KVA
Stacked Core 80 KVA to 100 KVA

Manufacturing Program

Fixture Type Transformers up to 200 KVA — Request "F" Series Bulletin
Portable Gun Type Transformers up to 200 KVA — Request "G" Series Bulletin
Machine Type Transformers up to 500 KVA — Request "M" Series Bulletin
Transgun/Robot Type Transformers — Request "T" Series Bulletin
Special Products — Request "S" Series Bulletin

RoMan Manufacturing Inc.
861 47th Street, S.W., Grand Rapids, MI 49509 (616) 530-8641

General Description:

- Fixture Type Transformer
- Inline Secondary Lugs RWMA
- Frame Cross Section 7¾" x 10¼"

Ordering Instructions:

- Order by model number shown
- Add "X" to model number if transformer is to be fully potted
- Specify primary conduit opening desired 1¼ NPT or 1½ NPT
- Specify tap switch position on 5-way mount models

WOUND CORE

KVA RATING 110°C RISE	SECONDARY VOLTAGE RANGE	TAP SWITCH LOCATION	PRIMARY CONNECTION	MODEL NUMBER		WEIGHT APPROX.	DWG. NO.	FRAME LETTER
				220 V/60 Hz	440 V/60 Hz			
120	6.8 to 9.1 Volts 5 Steps	End Mount	Disconnect Plug Solderless Lug	F226120C1BAW	F446120C1AAW F446120C1BAW	240 lbs.	R1303 Page 3	C
		5-Way Mount	Disconnect Plug Solderless Lug	F226120C1DAW	F446120C1CAW F446120C1DAW	247 lbs.	R1304 Page 4	
150	9.2 to 11.6 Volts 4 Steps	End Mount	Disconnect Plug Solderless Lug	F226150D1BAW	F446150D1AAW F446150D1BAW	265 lbs.	R1303 Page 3	D
		5-Way Mount	Disconnect Plug Solderless Lug	F226150D1DAW	F446150D1CAW F446150D1DAW	272 lbs.	R1304 Page 4	

STACKED CORE

KVA RATING 110°C RISE	SECONDARY VOLTAGE RANGE	TAP SWITCH LOCATION	PRIMARY CONNECTION	MODEL NUMBER		WEIGHT APPROX.	DWG. NO.	FRAME LETTER
				220 V/60 Hz	440 V/60 Hz			
80	5.0 to 7.5 Volts 5 Steps	End Mount	Disconnect Plug Solderless Lug	F22680C1AAL F22680C1BAL	F44680C1AAL F44680C1BAL	252 lbs.	R1303 Page 3	C
		5-Way Mount	Disconnect Plug Solderless Lug	F22680C1CAL F22680C1DAL	F44680C1CAL F44680C1DAL	259 lbs.	R1304 Page 4	
100	6.6 to 9.0 Volts 5 Steps	End Mount	Disconnect Plug Solderless Lug	F226100D1BAL	F446100D1AAL F446100D1BAL	277 lbs.	R1303 Page 3	D
		5-Way Mount	Disconnect Plug Solderless Lug	F226100D1DAL	F446100D1CAL F446100D1DAL	284 lbs.	R1304 Page 4	

Standard Features:

- Class "F" insulation
- Totally enclosed tap switch
- Secondary end positively sealed against contamination
- Blade type plug if applicable
- Interchangable with other manufacturers

Optional Features:

- Voltages and frequencies other than shown available on request
- Thermostats
- Pin type plug

FRAME LETTER	DIM. "A"	DIM. "B"
C	21.37	12.93
D	24.25	15.43

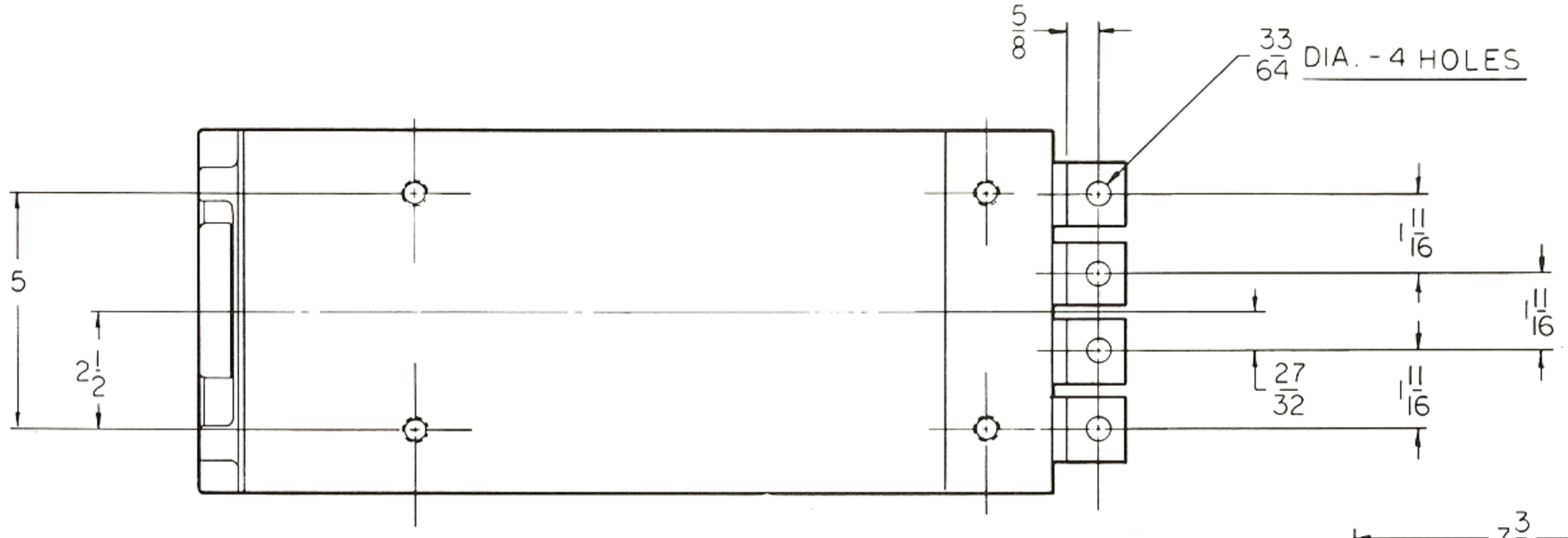

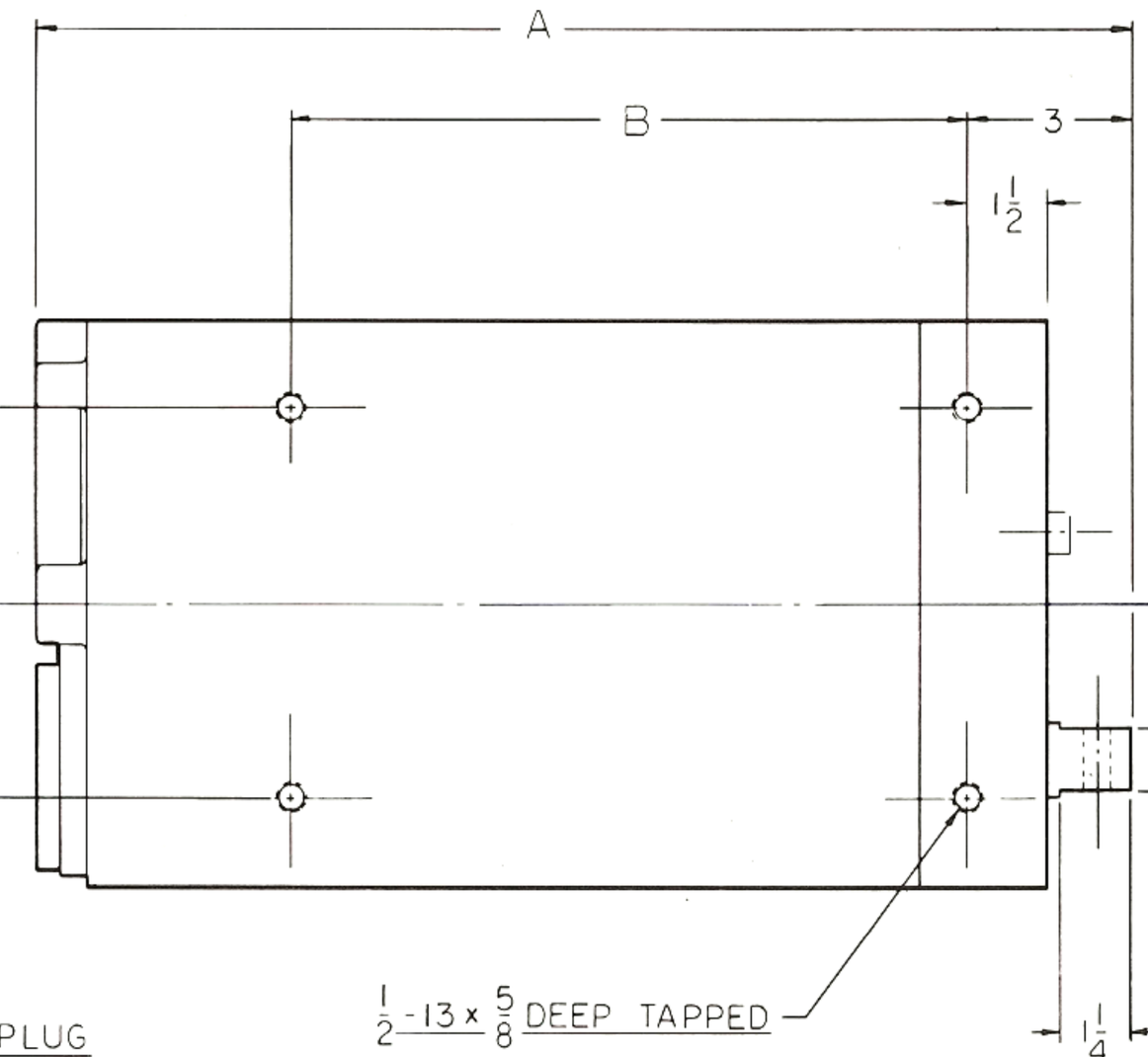

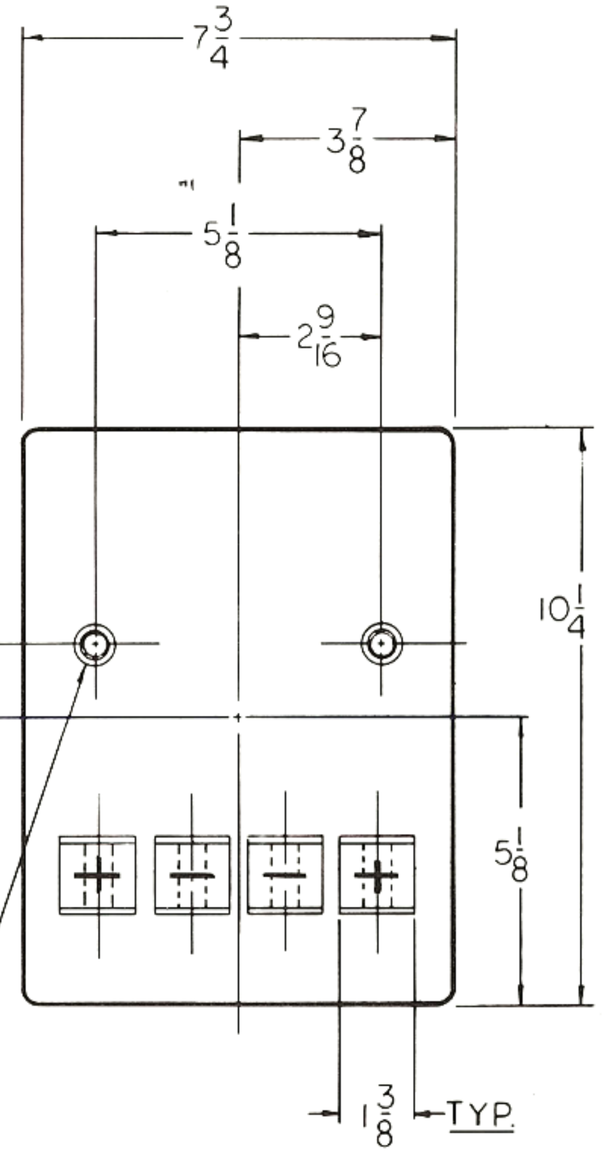

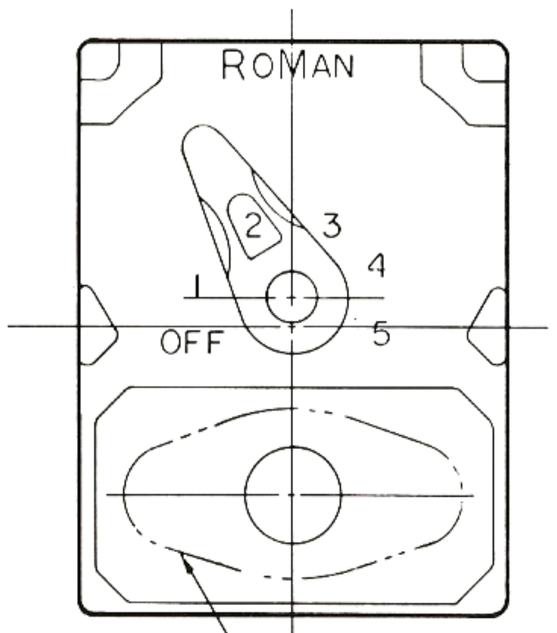

QUICK DISCONNECT PLUG
SHOWN IN PHANTOM

1/2 - 13 x 5/8 DEEP TAPPED
MTG. HOLES - 16 PLACES

1/4 N.P.T. WATER CONNECTIONS
1 G.P.M. MINIMUM - 2 PLACES

RoMan Manufacturing Inc.

FIXTURE TYPE TRANSFORMER

TAP SWITCH: END MOUNT
FRAME CROSS SECTION: 7 3/4" x 10 1/4

DRAWING NO. R1303
DATE: DEC., 1982

FRAME LETTER	DIM. "A"	DIM. "B"
C	23.87	12.93
D	26.37	15.43

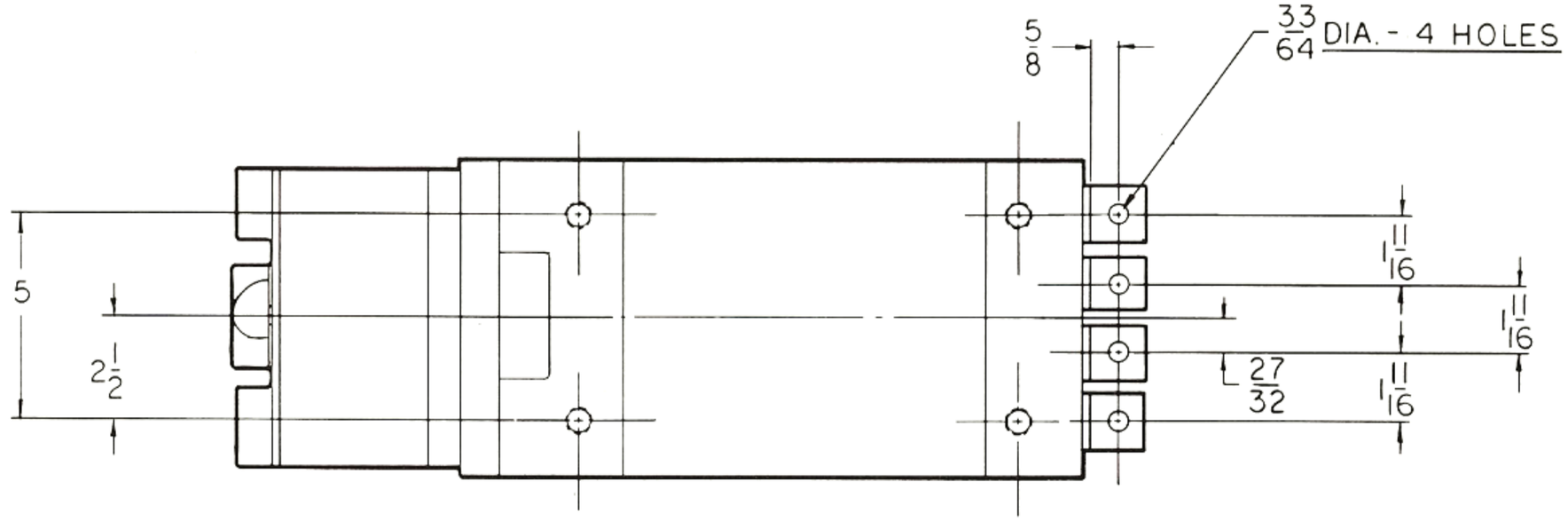

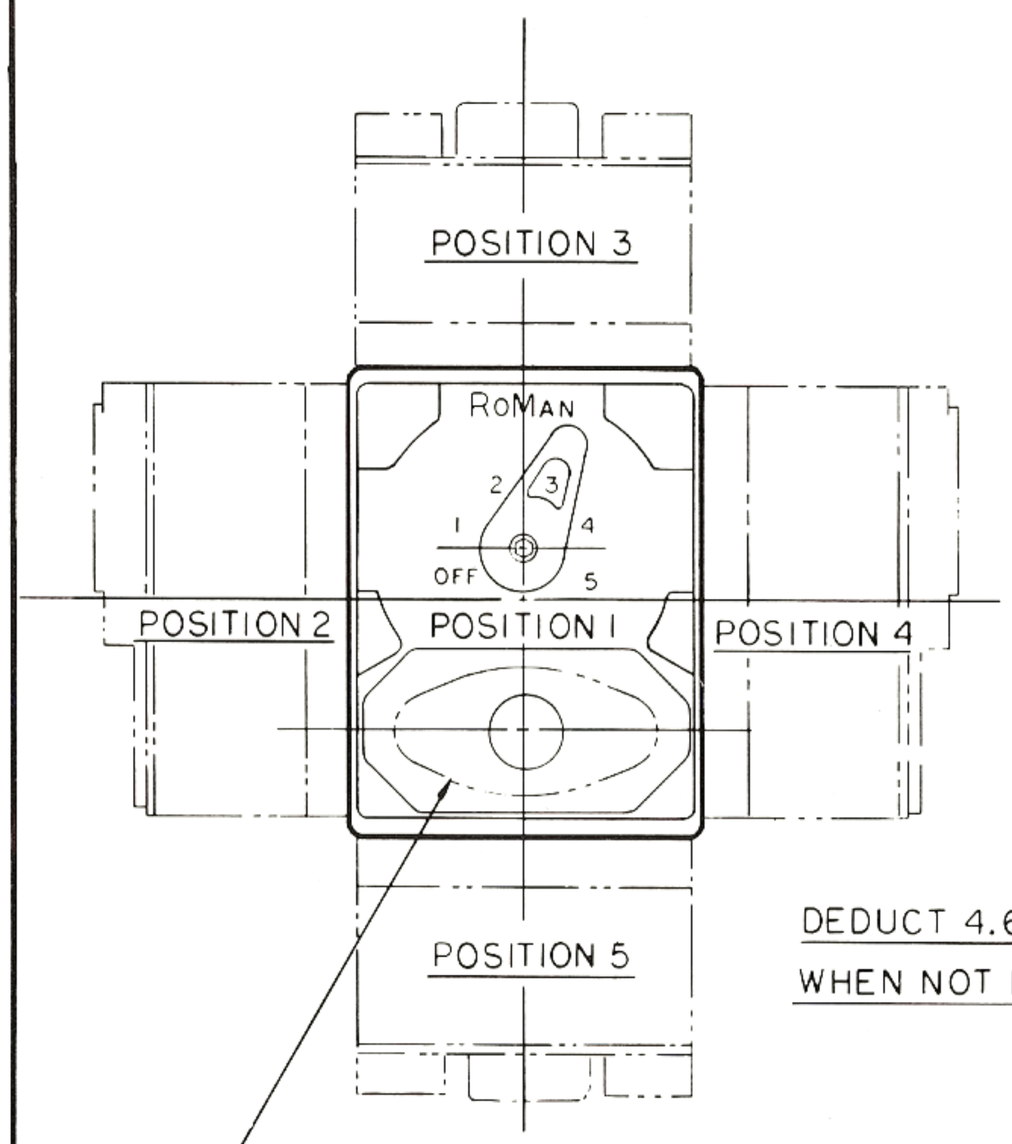

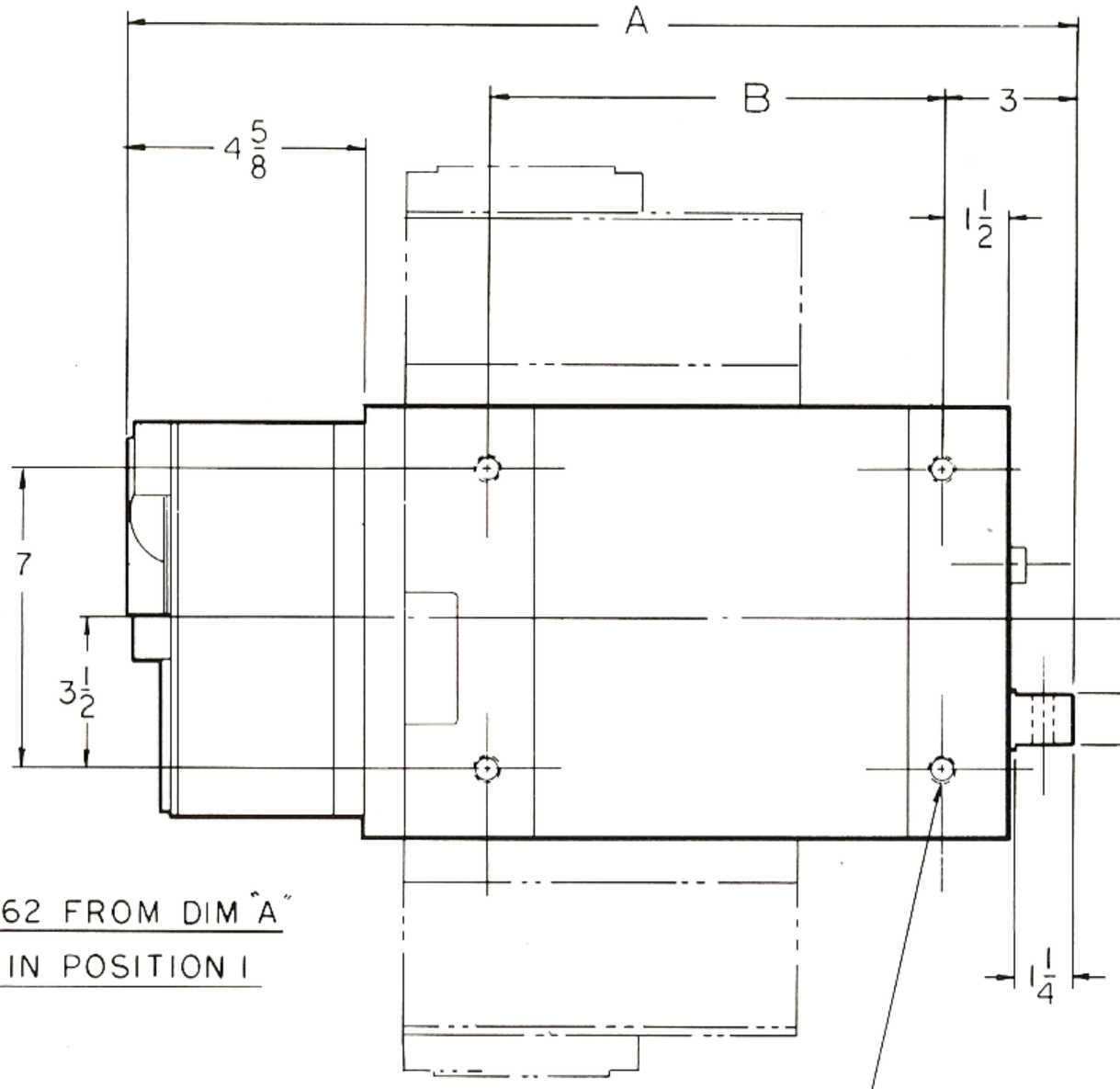

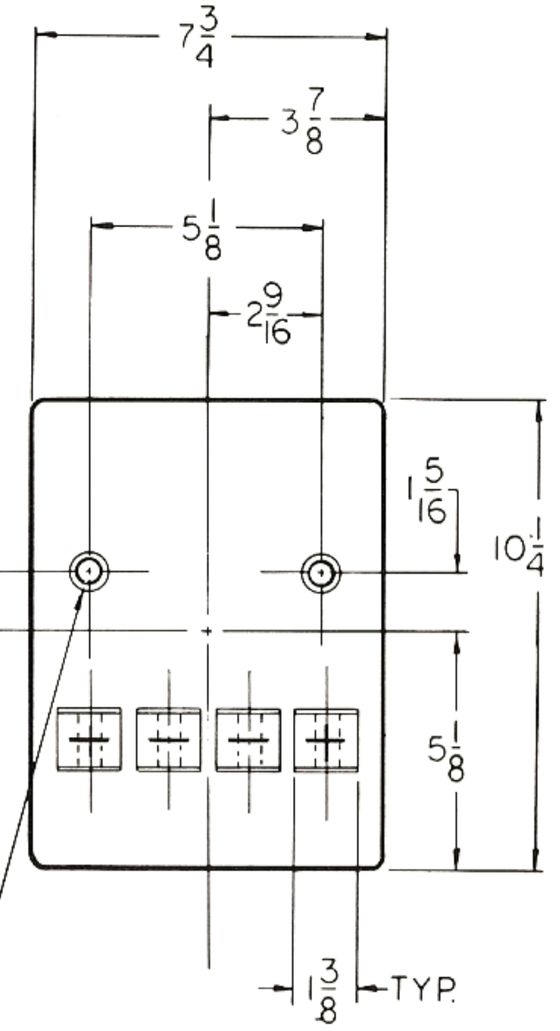

DEDUCT 4.62 FROM DIM "A"
WHEN NOT IN POSITION 1

QUICK DISCONNECT PLUG
SHOWN IN PHANTOM

1/2-13 x 5/8 DEEP TAPPED
MTG. HOLES - 16 PLACES

1/4 N.P.T. WATER CONNECTIONS
1 G.P.M. MINIMUM - 2 PLACES

RoMan Manufacturing Inc.

FIXTURE TYPE TRANSFORMER

TAP SWITCH: 5-WAY MOUNT

FRAME CROSS SECTION: 7 3/4" x 10 1/4"

DRAWING NO. R1304
DATE: DEC., 1982

BULLETIN F-4

Fixture Type Resistance Welding Transformers

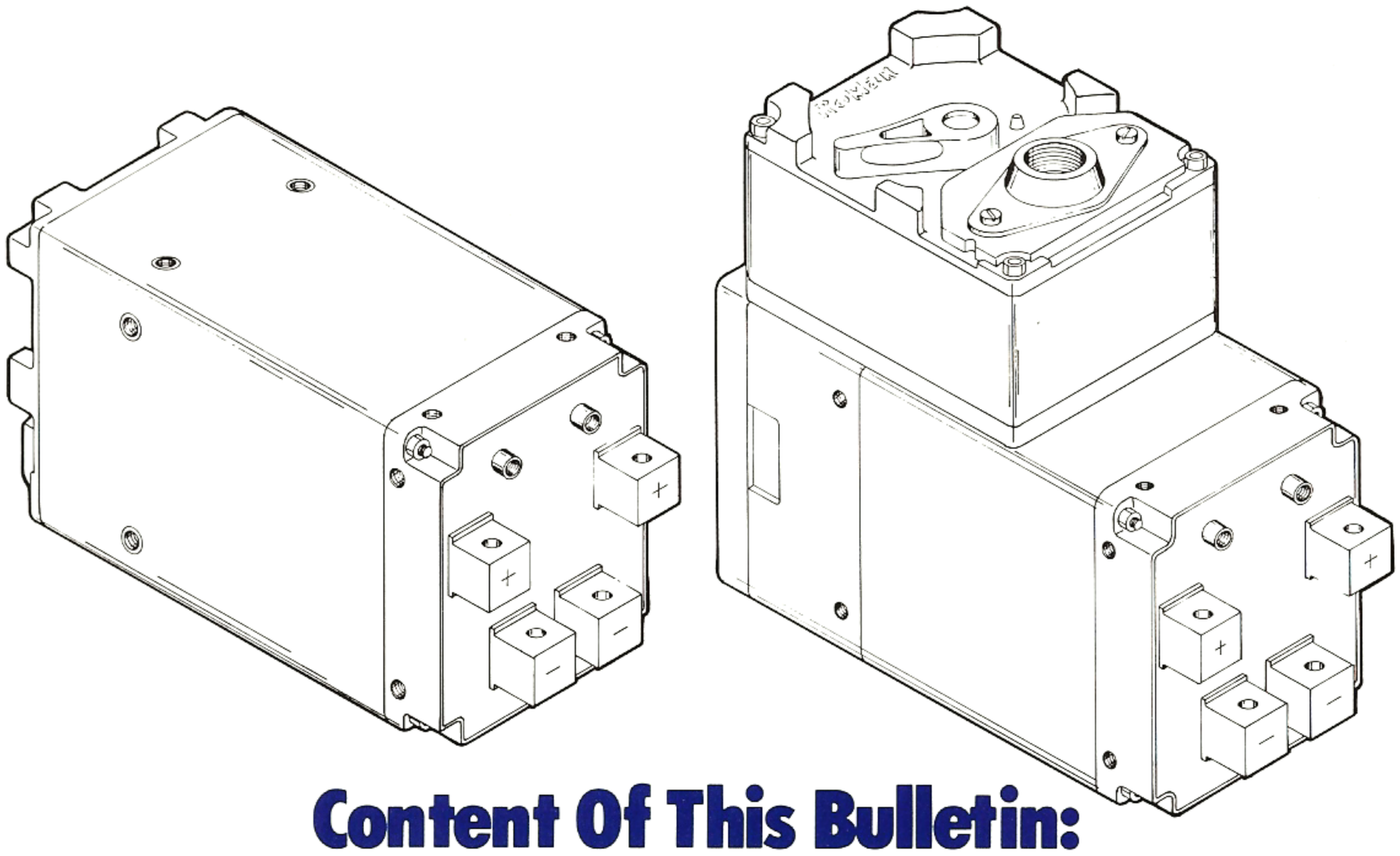

Content Of This Bulletin:

Fixture Type Transformer
Staggered Secondary Lugs
Frame Cross Section 7¾" x 10¼"
Wound Core 120 KVA to 200 KVA
Stacked Core 80 KVA to 150 KVA

Manufacturing Program

Fixture Type Transformers up to 200 KVA	Request "F" Series Bulletin
Portable Gun Type Transformers up to 200 KVA	Request "G" Series Bulletin
Machine Type Transformers up to 500 KVA	Request "M" Series Bulletin
Transgun/Robot Type Transformers	Request "T" Series Bulletin
Special Products	Request "S" Series Bulletin

RoMan
Manufacturing Inc.
861 47th Street, S.W., Grand Rapids, MI 49509 (616) 530-8641

General Description:

- Fixture Type Transformer
- Staggered Secondary Lugs
- Frame Cross Section 7¾" x 10¼"

Ordering Instructions:

- Order by model number shown
- Add "X" to model number if transformer is to be fully potted
- Specify primary conduit opening desired 1¼ NPT or 1½ NPT
- Specify tap switch position on 5-way mount models

WOUND CORE

KVA RATING 110°C RISE	SECONDARY VOLTAGE RANGE	TAP SWITCH LOCATION	PRIMARY CONNECTION	MODEL NUMBER		WEIGHT APPROX.	DWG. NO.	FRAME LETTER
				220 V/60 Hz	440 V/60 Hz			
120	6.8 to 9.1 Volts 5 Steps	End Mount	Disconnect Plug Solderless Lug	F226120C1BBW	F446120C1ABW F446120C1BBW	240 lbs.	R1091 Page 3	C
		5-Way Mount	Disconnect Plug Solderless Lug	F226120C1DBW	F446120C1CBW F446120C1DBW	247 lbs.	R1092 Page 4	
150	9.2 to 11.6 Volts 4 Steps	End Mount	Disconnect Plug Solderless Lug	F226150D1BBW	F446150D1ABW F446150D1BBW	265 lbs.	R1091 Page 3	D
		5-Way Mount	Disconnect Plug Solderless Lug	F226150D1DBW	F446150D1CBW F446150D1DBW	272 lbs.	R1092 Page 4	
150	9.2 to 12.2 Volts 4 Steps	End Mount	Disconnect Plug Solderless Lug	F226150F1BBW	F446150F1ABW F446150F1BBW	280 lbs.	R1091 Page 3	F
		5-Way Mount	Disconnect Plug Solderless Lug	F226150F1DBW	F446150F1CBW F446150F1DBW	287 lbs.	R1092 Page 4	
200	12.5 to 15.2 Volts 4 Steps	End Mount	Disconnect Plug Solderless Lug		F446200DL1ABW F446200DL1BBW	300 lbs.	R1091 Page 3	DL
		5-Way Mount	Disconnect Plug Solderless Lug		F446200DL1CBW F446200DL1DBW	307 lbs.	R1092 Page 4	

STACKED CORE

KVA RATING 110°C RISE	SECONDARY VOLTAGE RANGE	TAP SWITCH LOCATION	PRIMARY CONNECTION	MODEL NUMBER		WEIGHT APPROX.	DWG. NO.	FRAME LETTER
				220 V/60 Hz	440 V/60 Hz			
80	5.0 to 7.5 Volts 5 Steps	End Mount	Disconnect Plug Solderless Lug	F22680C1ABL F22680C1BBL	F44680C1ABL F44680C1BBL	252 lbs.	R1091 Page 3	C
		5-Way Mount	Disconnect Plug Solderless Lug	F22680C1CBL F22680C1DBL	F44680C1CBL F44680C1DBL	259 lbs.	R1092 Page 4	
100	6.6 to 9.0 Volts 5 Steps	End Mount	Disconnect Plug Solderless Lug	F226100D1BBL	F446100D1ABL F446100D1BBL	275 lbs.	R1091 Page 3	D
		5-Way Mount	Disconnect Plug Solderless Lug	F226100D1DBL	F446100D1CBL F446100D1DBL	282 lbs.	R1092 Page 4	
125	7.8 to 10.0 Volts 4 Steps	End Mount	Disconnect Plug Solderless Lug	F226125F1BBL	F446125F1ABL F446125F1BBL	292 lbs.	R1091 Page 3	F
		5-Way Mount	Disconnect Plug Solderless Lug	F226125F1DBL	F446125F1CBL F446125F1DBL	299 lbs.	R1092 Page 4	
150	9.4 to 11.7 Volts 4 Steps	End Mount	Disconnect Plug Solderless Lug	F226150DL1BBL	F446150DL1ABL F446150DL1BBL	310 lbs.	R1091 Page 3	DL
		5-Way Mount	Disconnect Plug Solderless Lug	F226150DL1DBL	F446150DL1CBL F446150DL1DBL	317 lbs.	R1092 Page 4	

Standard Features:

- Class "F" insulation
- Totally enclosed tap switch
- Secondary end positively sealed against contamination
- Blade type plug if applicable
- Interchangable with other manufacturers

Optional Features:

- Voltages and frequencies other than shown available on request
- Thermostats

FRAME LETTER	DIM. "A"	DIM. "B"
C	21.50	12.93
F	24.81	16.25
D	24.37	15.43
DL	28.68	19.56

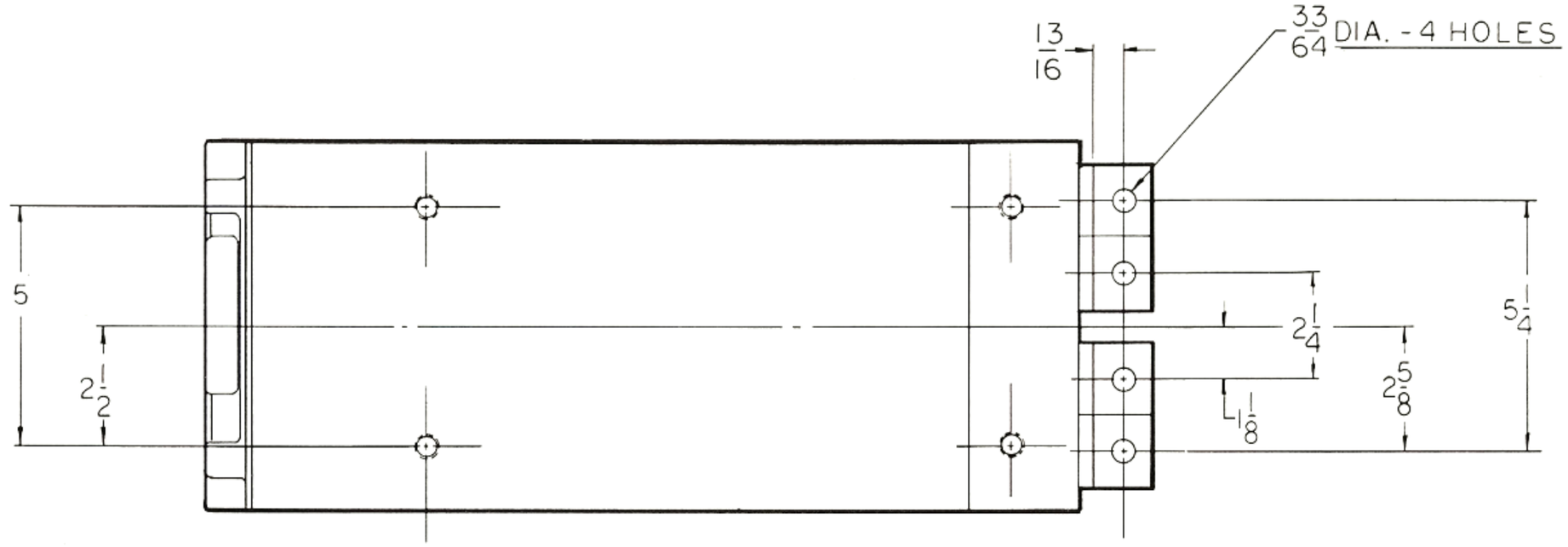

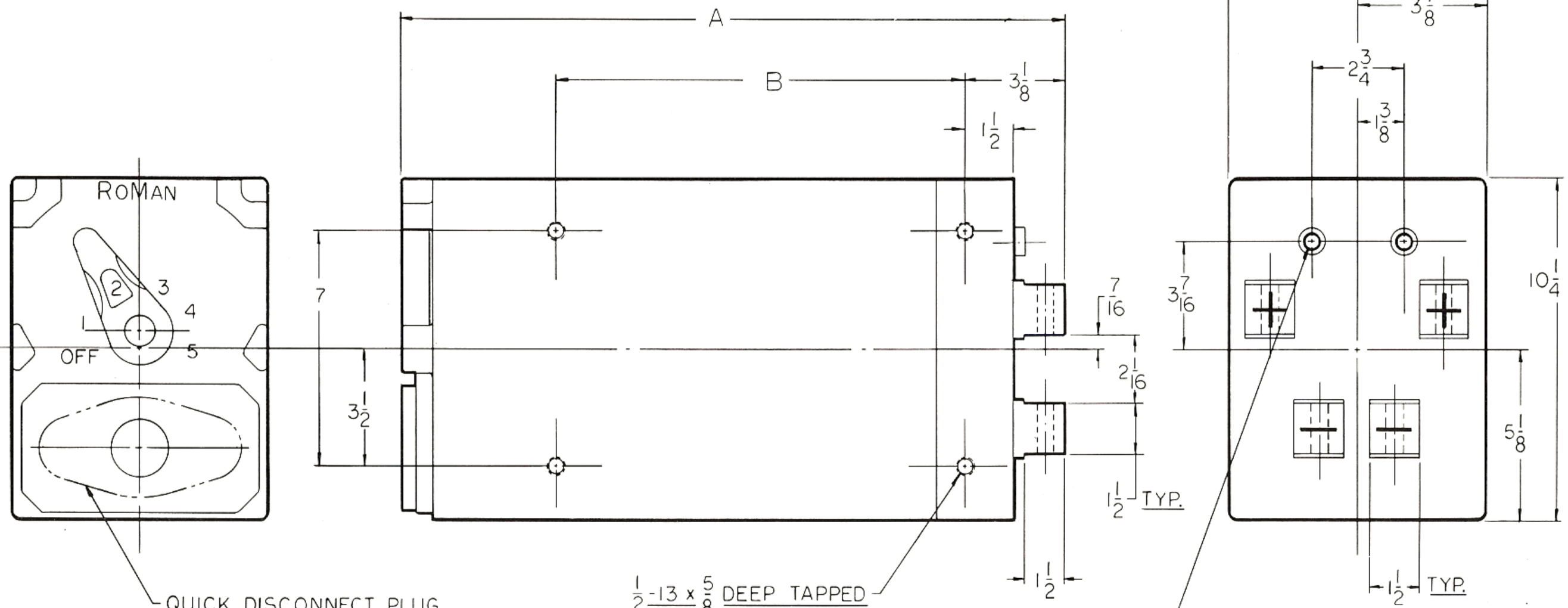

RoMan Manufacturing Inc.

FIXTURE TYPE TRANSFORMER

TAP SWITCH: END MOUNT

FRAME CROSS SECTION: 7 3/4" x 10 1/4"

DRAWING. NO. R1091

DATE: DEC., 1982

FRAME LETTER	DIM. "A"	DIM. "B"
C	24.00	12.93
D	26.50	15.43
F	27.31	16.25
DL	30.62	19.56

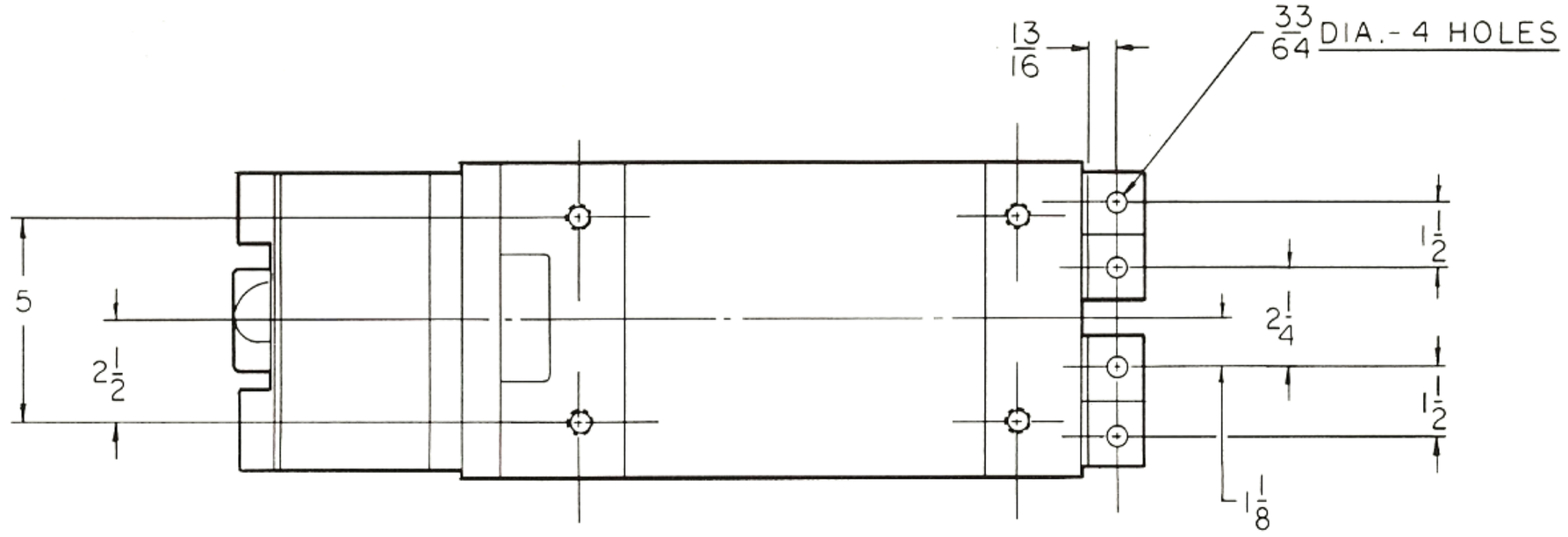

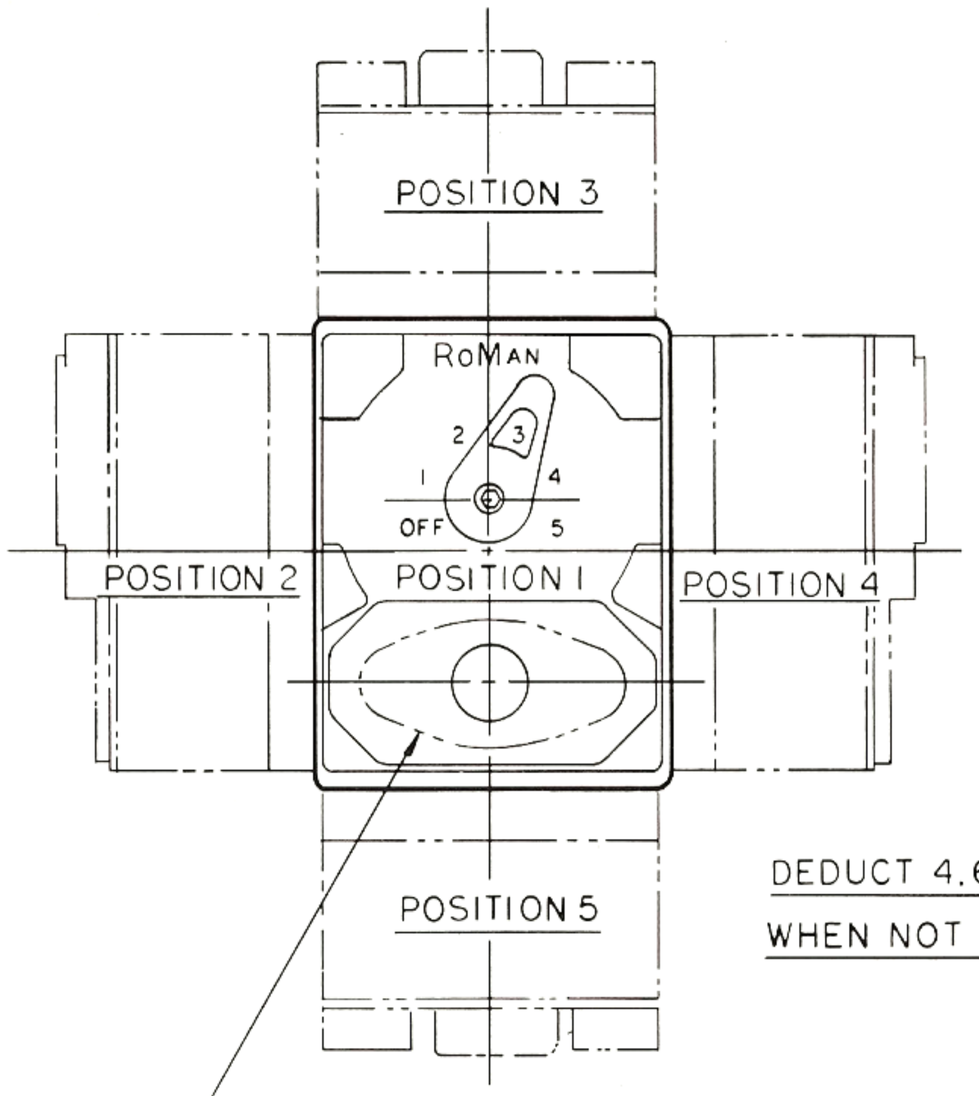

QUICK DISCONNECT PLUG
SHOWN IN PHANTOM

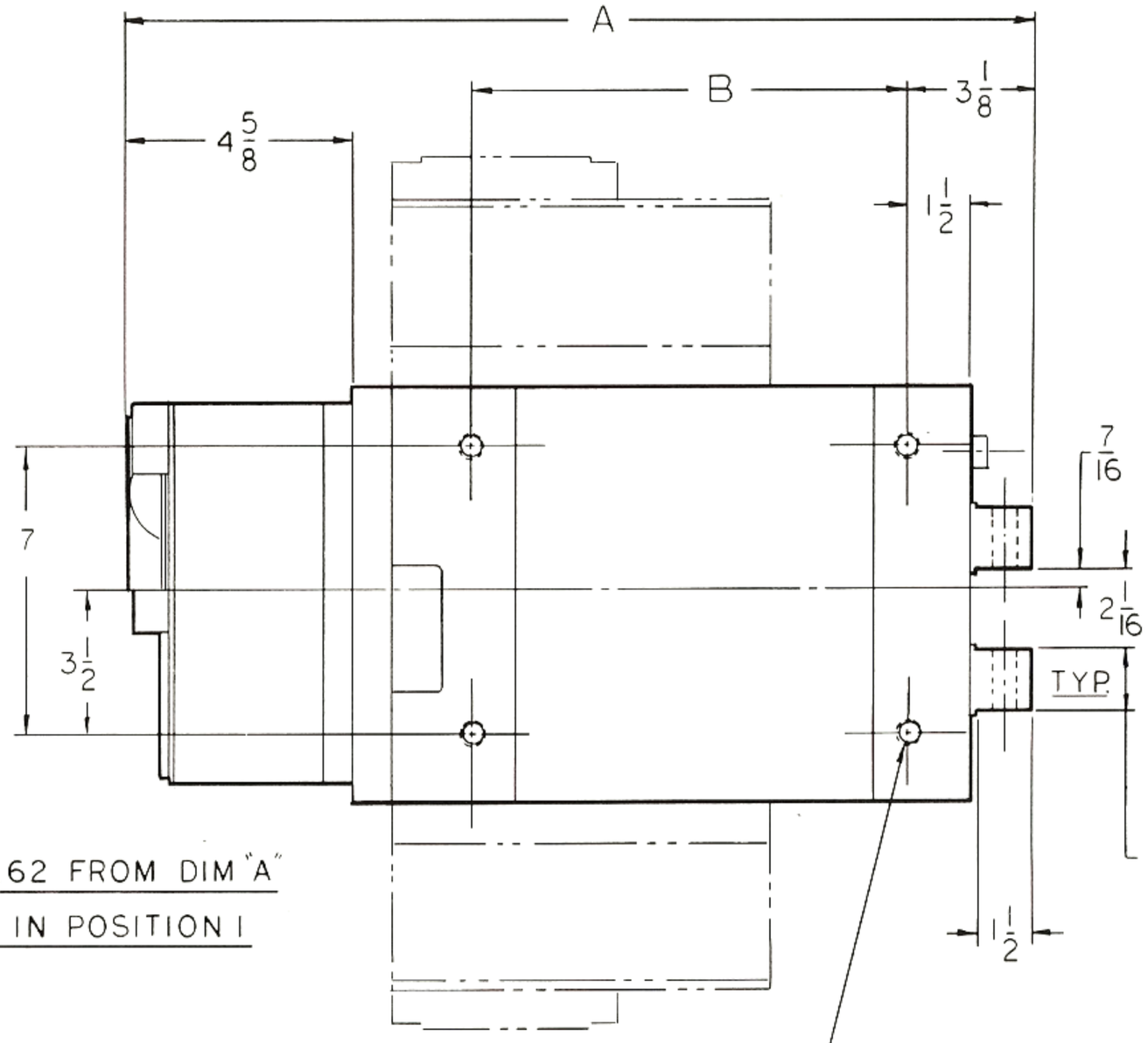

DEDUCT 4.62 FROM DIM "A"
WHEN NOT IN POSITION 1

1/2-13 x 5/8 DEEP TAPPED
MTG. HOLES - 16 PLACES

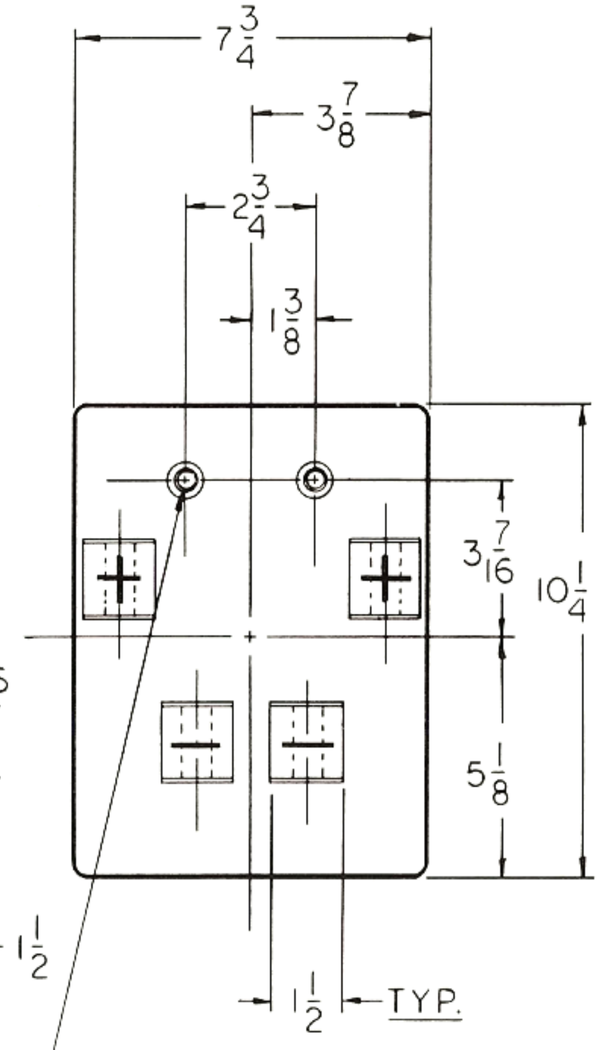

1/4 N.P.T. WATER CONNECTIONS
1 G.P.M. MINIMUM - 2 PLACES

RoMan Manufacturing Inc.

FIXTURE TYPE TRANSFORMER

TAP SWITCH: 5-WAY MOUNT

FRAME CROSS SECTION: $7\frac{3}{4}'' \times 10\frac{1}{4}''$

DRAWING NO. R1092
DATE: DEC., 1982

BULLETIN F-4.1

Fixture Type Resistance Welding Transformers

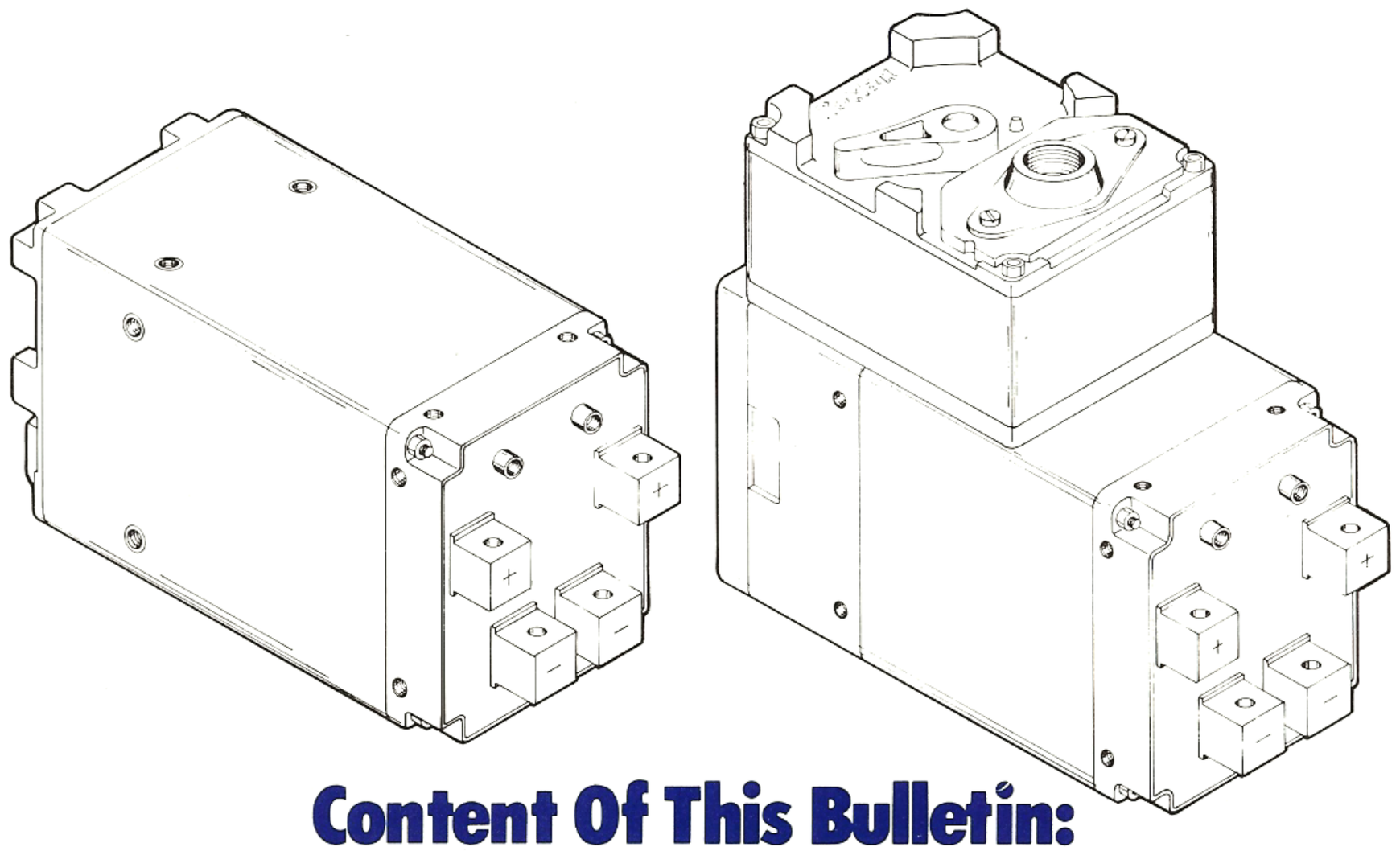

Content Of This Bulletin:

Fixture Type Transformer
Staggered Secondary Lugs RWMA
Frame Cross Section 7¾″ x 10¼″
Wound Core 120 KVA to 200 KVA
Stacked Core 80 KVA to 150 KVA

Manufacturing Program

Fixture Type Transformers up to 200 KVA	Request "F" Series Bulletin
Portable Gun Type Transformers up to 200 KVA	Request "G" Series Bulletin
Machine Type Transformers up to 500 KVA	Request "M" Series Bulletin
Transgun/Robot Type Transformers	Request "T" Series Bulletin
Special Products	Request "S" Series Bulletin

RoMan Manufacturing Inc.
861 47th Street, S.W., Grand Rapids, MI 49509 (616) 530-8641

General Description:

- Fixture Type Transformer
- Staggered Secondary Lugs RWMA
- Frame Cross Section 7¾" x 10¼"

Ordering Instructions:

- Order by model number shown
- Add "X" to model number if transformer is to be fully potted
- Specify primary conduit opening desired 1¼ NPT or 1½ NPT
- Specify tap switch position on 5-way mount models

WOUND CORE

KVA RATING 110°C RISE	SECONDARY VOLTAGE RANGE	TAP SWITCH LOCATION	PRIMARY CONNECTION	MODEL NUMBER		WEIGHT APPROX.	DWG. NO.	FRAME LETTER
				220 V/60 Hz	440 V/60 Hz			
120 RWMA TYPE C-1	6.8 to 9.1 Volts 5 Steps	End Mount	Disconnect Plug Solderless Lug	F226120C1BEW	F446120C1AEW F446120C1BEW	240 lbs.	R1384 Page 3	C
		5-Way Mount	Disconnect Plug Solderless Lug	F226120C1DEW	F446120C1CEW F446120C1DEW	247 lbs.	R1385 Page 4	
150	9.2 to 11.6 Volts 4 Steps	End Mount	Disconnect Plug Solderless Lug	F226150D1BEW	F446150D1AEW F446150D1BEW	265 lbs.	R1384 Page 3	D
		5-Way Mount	Disconnect Plug Solderless Lug	F226150D1DEW	F446150D1CEW F446150D1DEW	272 lbs.	R1385 Page 4	
150	9.2 to 12.2 Volts 4 Steps	End Mount	Disconnect Plug Solderless Lug	F226150F1BEW	F446150F1AEW F446150F1BEW	280 lbs.	R1384 Page 3	F
		5-Way Mount	Disconnect Plug Solderless Lug	F226150F1DEW	F446150F1CEW F446150F1DEW	287 lbs.	R1385 Page 4	
200	12.5 to 15.2 Volts 4 Steps	End Mount	Disconnect Plug Solderless Lug		F446200DL1AEW F446200DL1BEW	300 lbs.	R1384 Page 3	DL
		5-Way Mount	Disconnect Plug Solderless Lug		F446200DL1CEW F446200DL1DEW	307 lbs.	R1385 Page 4	

STACKED CORE

KVA RATING 110°C RISE	SECONDARY VOLTAGE RANGE	TAP SWITCH LOCATION	PRIMARY CONNECTION	MODEL NUMBER		WEIGHT APPROX.	DWG. NO.	FRAME LETTER
				220 V/60 Hz	440 V/60 Hz			
80	5.0 to 7.5 Volts 5 Steps	End Mount	Disconnect Plug Solderless Lug	F22680C1AEL F22680C1BEL	F44680C1AEL F44680C1BEL	252 lbs.	R1384 Page 3	C
		5-Way Mount	Disconnect Plug Solderless Lug	F22680C1CEL F22680C1DEL	F44680C1CEL F44680C1DEL	259 lbs.	R1385 Page 4	
100	6.6 to 9.0 Volts 5 Steps	End Mount	Disconnect Plug Solderless Lug	F226100D1BEL	F446100D1AEL F446100D1BEL	275 lbs.	R1384 Page 3	D
		5-Way Mount	Disconnect Plug Solderless Lug	F226100D1DEL	F446100D1CEL F446100D1DEL	282 lbs.	R1385 Page 4	
125	7.8 to 10.0 Volts 4 Steps	End Mount	Disconnect Plug Solderless Lug	F226125F1BEL	F446125F1AEL F446125F1BEL	292 lbs.	R1384 Page 3	F
		5-Way Mount	Disconnect Plug Solderless Lug	F226125F1DEL	F446125F1CEL F446125F1DEL	299 lbs.	R1385 Page 4	
150	9.4 to 11.7 Volts 4 Steps	End Mount	Disconnect Plug Solderless Lug	F226150DL1BEL	F446150DL1AEL F446150DL1BEL	310 lbs.	R1384 Page 3	DL
		5-Way Mount	Disconnect Plug Solderless Lug	F226150DL1DEL	F446150DL1CEL F446150DL1DEL	317 lbs.	R1385 Page 4	

Standard Features:

- Class "F" insulation
- Totally enclosed tap switch
- Secondary end positively sealed against contamination
- Blade type plug if applicable
- Interchangable with other manufacturers

Optional Features:

- Voltages and frequencies other than shown available on request
- Thermostats

FRAME LETTER	DIM. "A"	DIM. "B"
C	21.50	12.93
F	24.81	16.25
D	24.37	15.43
DL	28.68	19.56

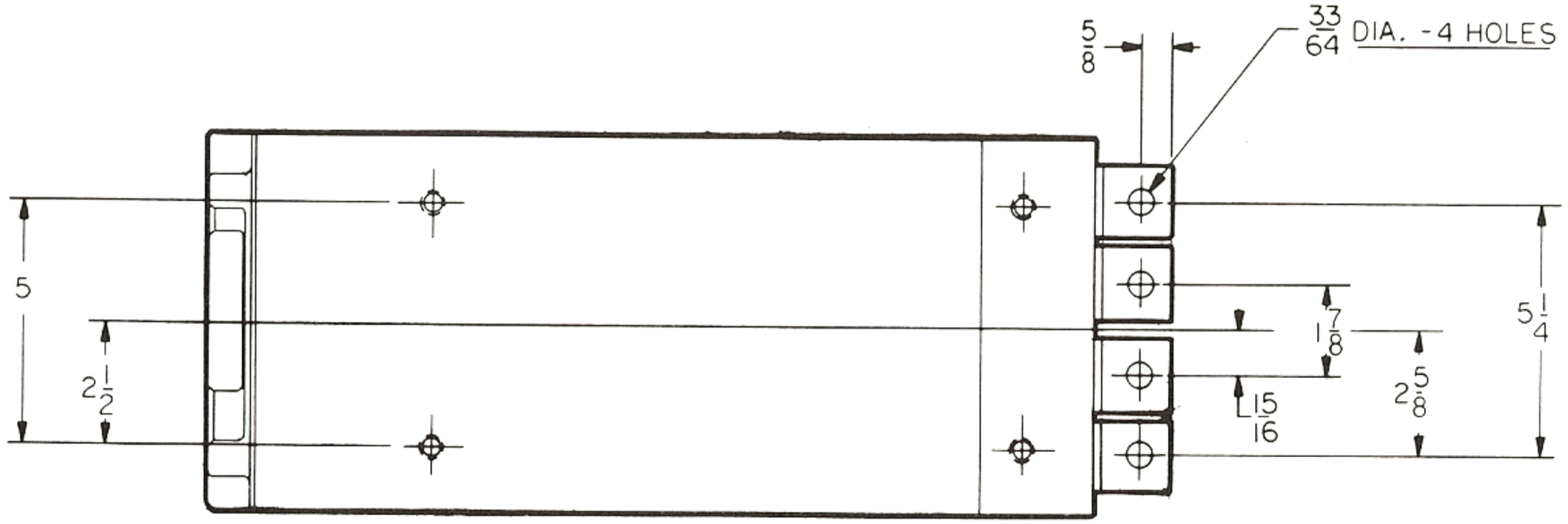

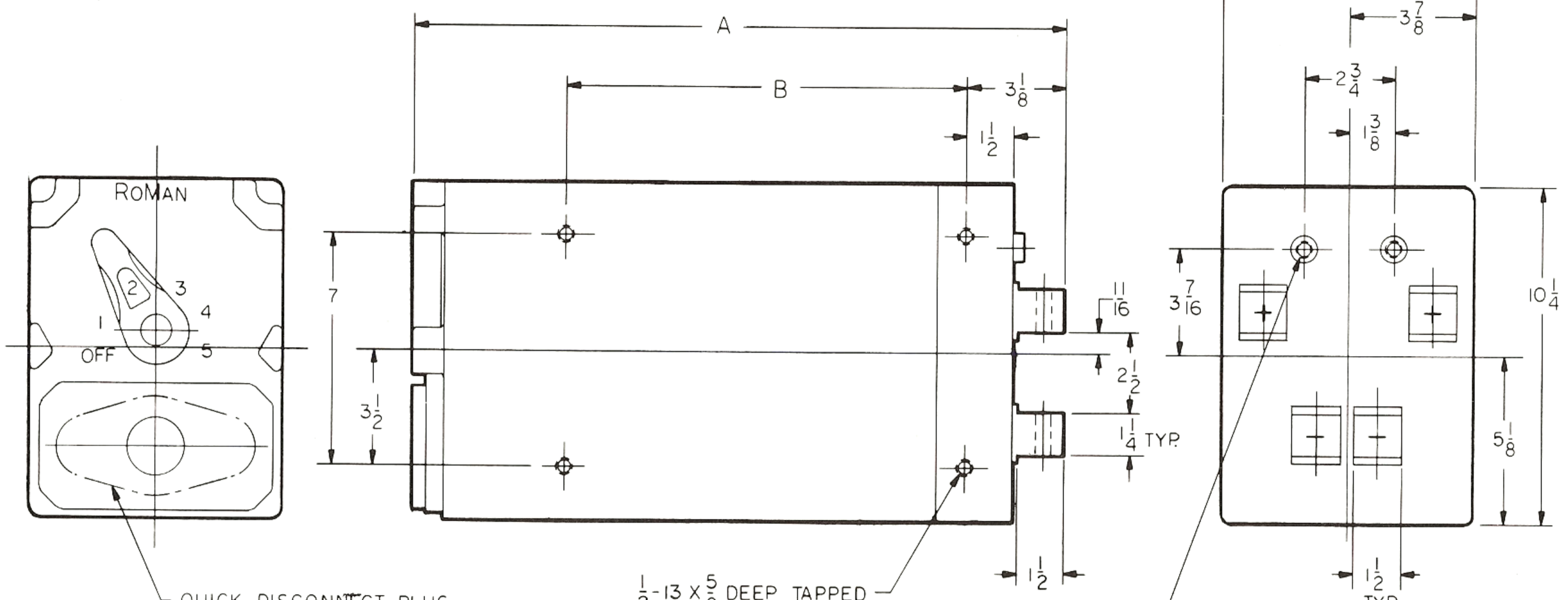

RoMan Manufacturing Inc.

FIXTURE TYPE TRANSFORMER

TAP SWITCH-END MOUNT

FRAME CROSS SECTION - $7\frac{3}{4}'' \times 10\frac{1}{4}''$

DRAWING NO. R1384

DATE- AUG. 12, 1984

FRAME LETTER	DIM "A"	DIM "B"
C	24.00	12.93
D	26.50	15.43
F	27.31	16.25
DL	30.62	19.56

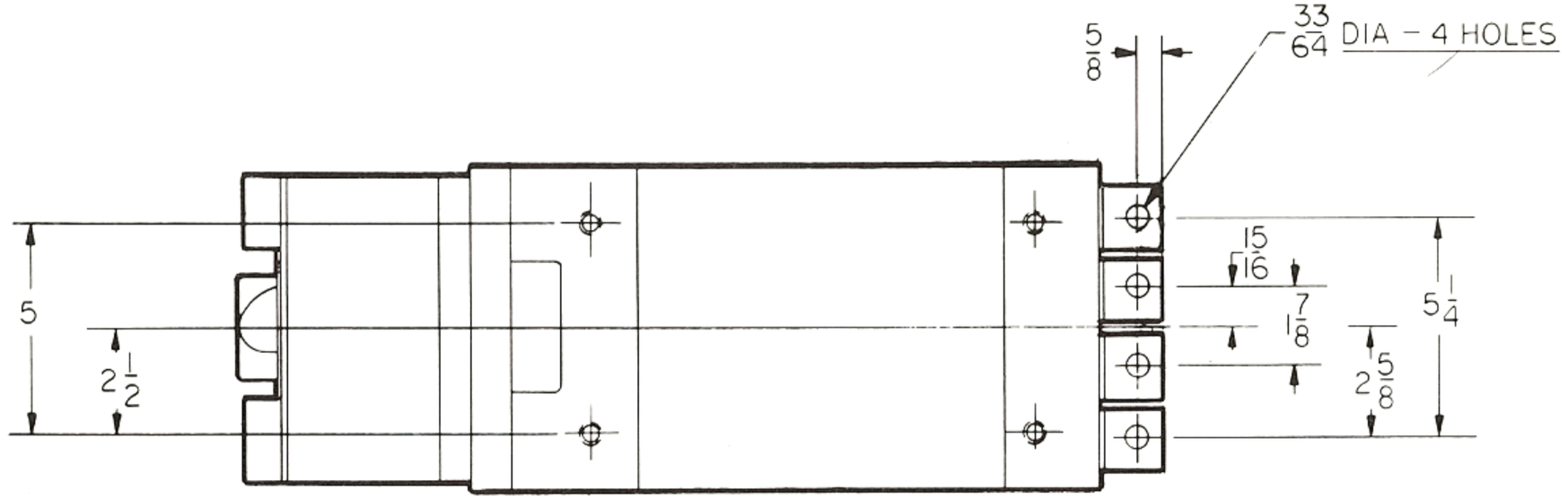

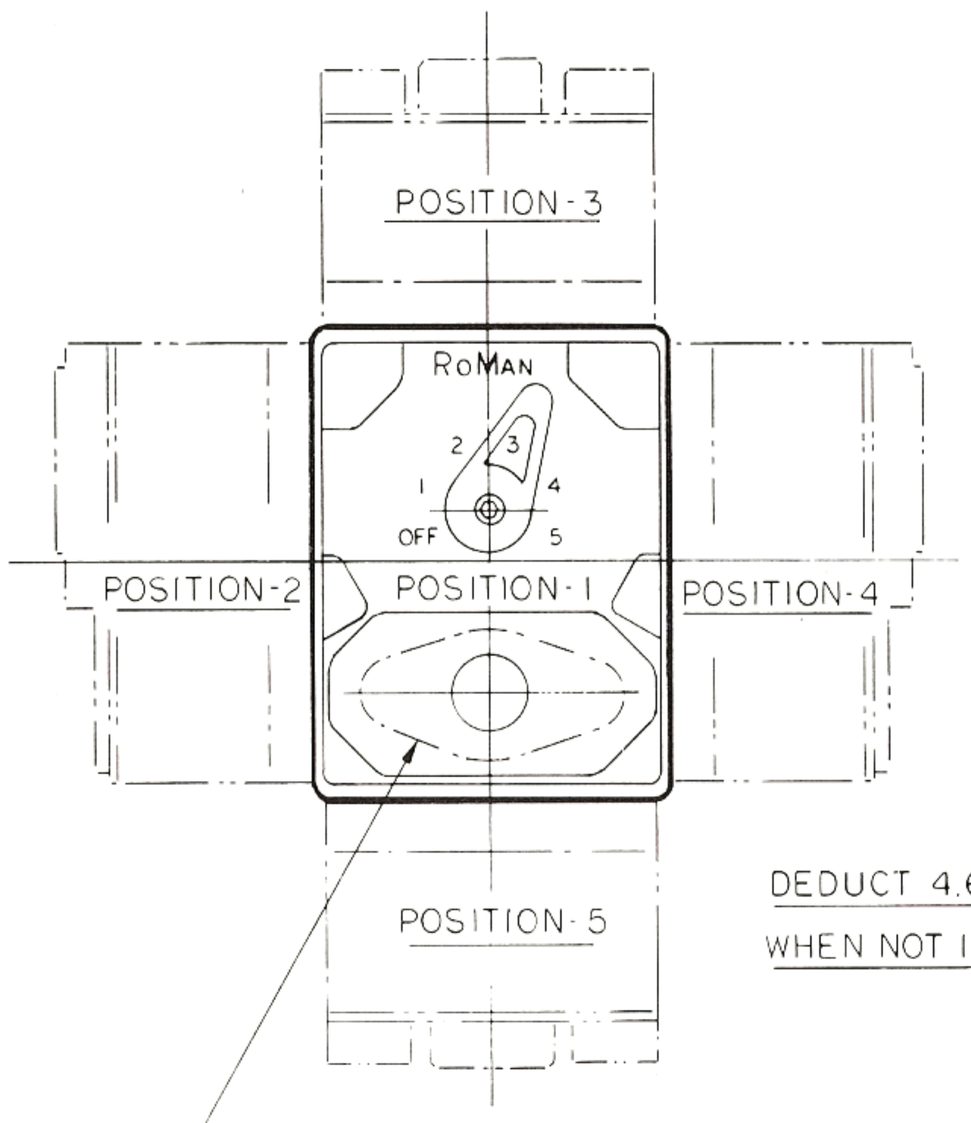

QUICK DISCONNECT PLUG
SHOWN IN PHANTOM

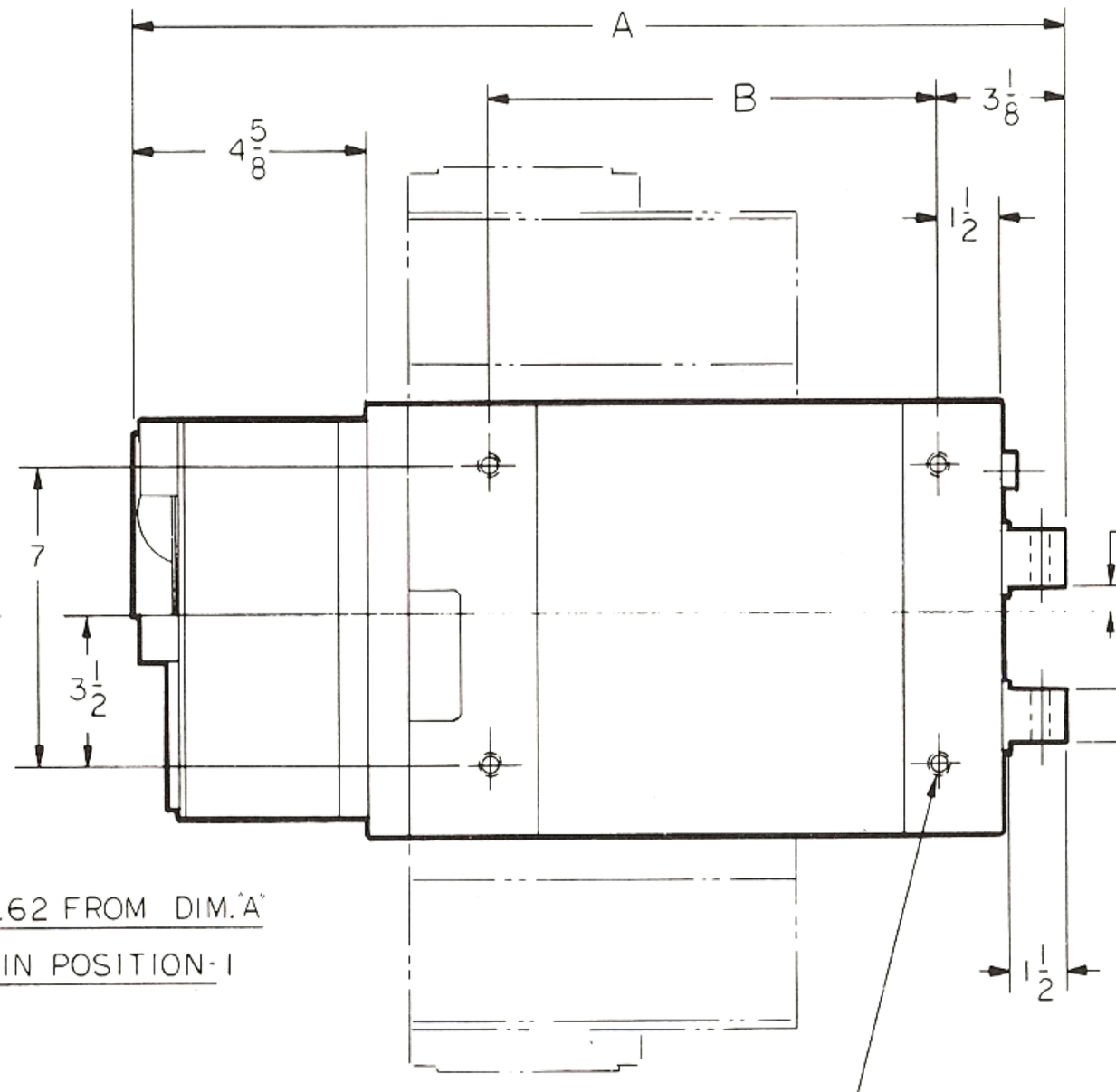

DEDUCT 4.62 FROM DIM."A"
WHEN NOT IN POSITION-1

1/2-13 X 5/8 DEEP TAPPED
MTG. HOLES – 16 PLACES

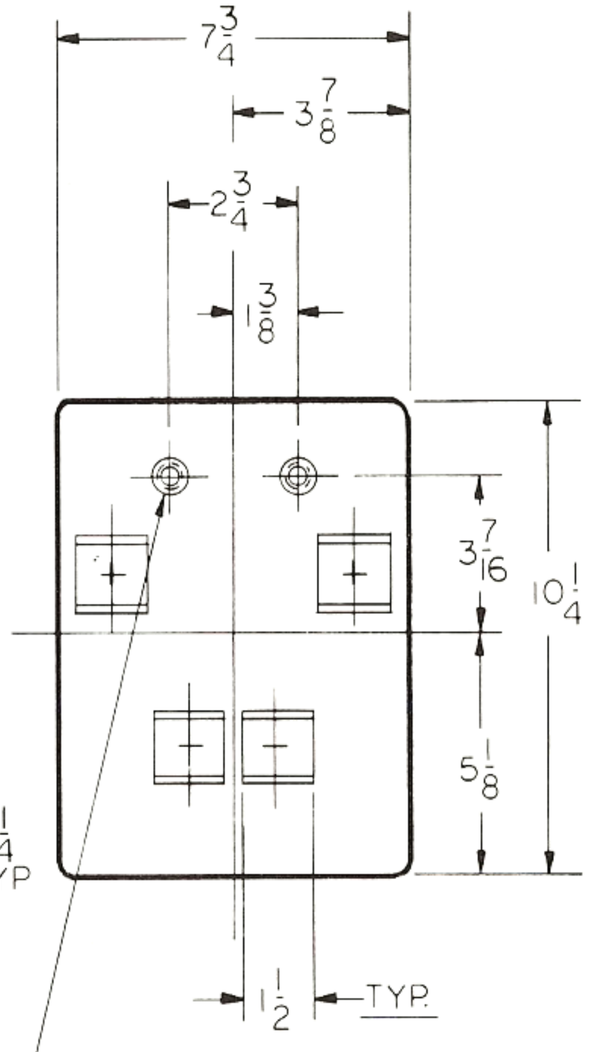

1/4 NPT. WATER CONNECTIONS
1 GPM. MINIMUM - 2 PLACES

RoMan Manufacturing Inc.

FIXTURE TYPE TRANSFORMER

TAP SWITCH 5-WAY MOUNT

FRAME CROSS SECTION $7\frac{3}{4}$" X $10\frac{1}{4}$"

DRAWING NO. R1385

DATE - AUG. 13, 1984

BULLETIN F-4.2

Fixture Type Resistance Welding Transformers

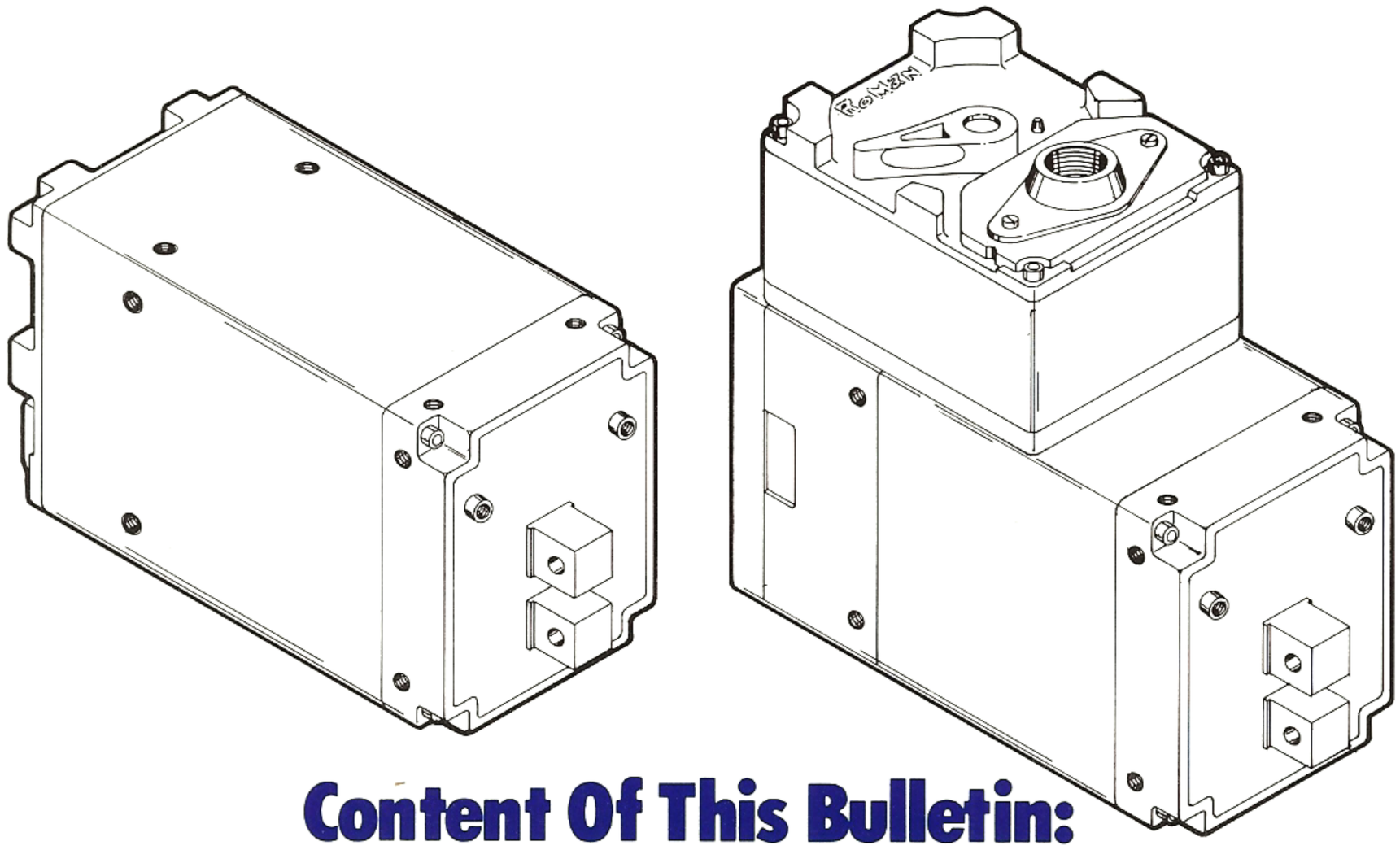

Content Of This Bulletin:

Fixture Type Transformer
Internally Paralleled (2-Lug)
Frame Cross Section 7¾ x 10¼

Wound Core 120 KVA to 200 KVA
Stacked Core 80 KVA to 150 KVA

Manufacturing Program

Fixture Type Transformers up to 200 KVA	Request "F" Series Bulletin
Portable Gun Type Transformers up to 200 KVA	Request "G" Series Bulletin
Machine Type Transformers up to 500 KVA	Request "M" Series Bulletin
Transgun/Robot Type Transformers	Request "T" Series Bulletin
Special Products	Request "S" Series Bulletin

RoMan Manufacturing Inc.

861 47th Street, S.W., Grand Rapids, MI 49509 Phone (616) 530-8641 FAX (616) 530-8953

General Description:

- Fixture Type Transformer
- Internally Paralleled Secondary
- Frame Cross Section 7¾'' x 10¼''

Ordering Instructions:

- Order by model number shown
- Add "X" to model number if transformer is to be fully potted
- Specify primary conduit opening desired 1¼ NPT or 1½ NPT
- Specify tap switch position on 5-way mount models

WOUND CORE

KVA RATING 110°C RISE	SECONDARY VOLTAGE RANGE	TAP SWITCH LOCATION	PRIMARY CONNECTION	MODEL NUMBER		WEIGHT APPROX.	DWG. NO.	FRAME LETTER
				220V/60 Hz	440 V/60 Hz			
120	6.8 to 9.1 Volts 5 Steps	End Mount	Disconnect Plug Solderless Lug	F226120C1BCW	F446120C1ACW F446120C1BCW	240 lbs.	R1887 Page 3	C
		5-Way Mount	Disconnect Plug Solderless Lug	F226120C1DCW	F446120C1CCW F446120C1DCW	247 lbs.	R1888 Page 4	
150	9.2 to 11.6 Volts 4 Steps	End Mount	Disconnect Plug Solderless Lug	F226150D1BCW	F446150D1ACW F446150D1BCW	265 lbs.	R1887 Page 3	D
		5-Way Mount	Disconnect Plug Solderless Lug	F226150D1DCW	F446150D1CCW F446150D1DCW	272 lbs.	R1888 Page 4	
150	9.2 to 12.2 Volts 4 Steps	End Mount	Disconnect Plug Solderless Lug	F226150F1BCW	F446150F1ACW F446150F1BCW	280 lbs.	R1887 Page 3	F
		5-Way Mount	Disconnect Plug Solderless Lug	F226150F1DCW	F446150F1CCW F446150F1DCW	287 lbs.	R1888 Page 4	
200	12.5 to 15.2 Volts 4 Steps	End Mount	Disconnect Plug Solderless Lug		F446200DL1ACW F446200DL1BCW	300 lbs.	R1887 Page 3	DL
		5-Way Mount	Disconnect Plug Solderless Lug		F446200DL1CCW F446200DL1DCW	307 lbs.	R1888 Page 4	

STACKED CORE

KVA RATING 110°C RISE	SECONDARY VOLTAGE RANGE	TAP SWITCH LOCATION	PRIMARY CONNECTION	MODEL NUMBER		WEIGHT APPROX.	DWG. NO.	FRAME LETTER
				220V/60 Hz	440 V/60 Hz			
80	5.0 to 7.5 Volts 5 Steps	End Mount	Disconnect Plug Solderless Lug	F22680C1ACL F22680C1BCL	F44680C1ACL F44680C1BCL	252 lbs.	R1887 Page 3	C
		5-Way Mount	Disconnect Plug Solderless Lug	F22680C1CCL F22680C1DCL	F44680C1CCL F44680C1DCL	259 lbs.	R1888 Page 4	
100	6.6 to 9.0 Volts 5 Steps	End Mount	Disconnect Plug Solderless Lug	F226100D1BCL	F446100D1ACL F446100D1BCL	275 lbs.	R1887 Page 3	D
		5-Way Mount	Disconnect Plug Solderless Lug	F226100D1DCL	F446100D1CCL F446100D1DCL	282 lbs.	R1888 Page 4	
125	7.8 to 10.0 Volts 4 Steps	End Mount	Disconnect Plug Solderless Lug	F226125F1BCL	F446125F1ACL F446125F1BCL	292 lbs.	R1887 Page 3	F
		5-Way Mount	Disconnect Plug Solderless Lug	F226125F1DCL	F446125F1CCL F446125F1DCL	299 lbs.	R1888 Page 4	
150	9.4 to 11.7 Volts 4 Steps	End Mount	Disconnect Plug Solderless Lug	F226150DL1BCL	F446150DL1ACL F446150DL1BCL	310 lbs.	R1887 Page 3	DL
		5-Way Mount	Disconnect Plug Solderless Lug	F226150DL1DCL	F446150DL1CCL F446150DL1DCL	317 lbs.	R1888 Page 4	

Standard Features:

- Class "F" insulation
- Totally enclosed tap switch
- Secondary end positively sealed against contamination
- Blade type plug if applicable
- Interchangable with other manufacturers

Optional Features:

- Voltages and frequencies other than shown available on request
- Thermostats

FRAME LETTER	DIM A	DIM B
C	21.50	12.93
F	24.81	16.25
D	24.37	15.43
DL	28.68	19.56

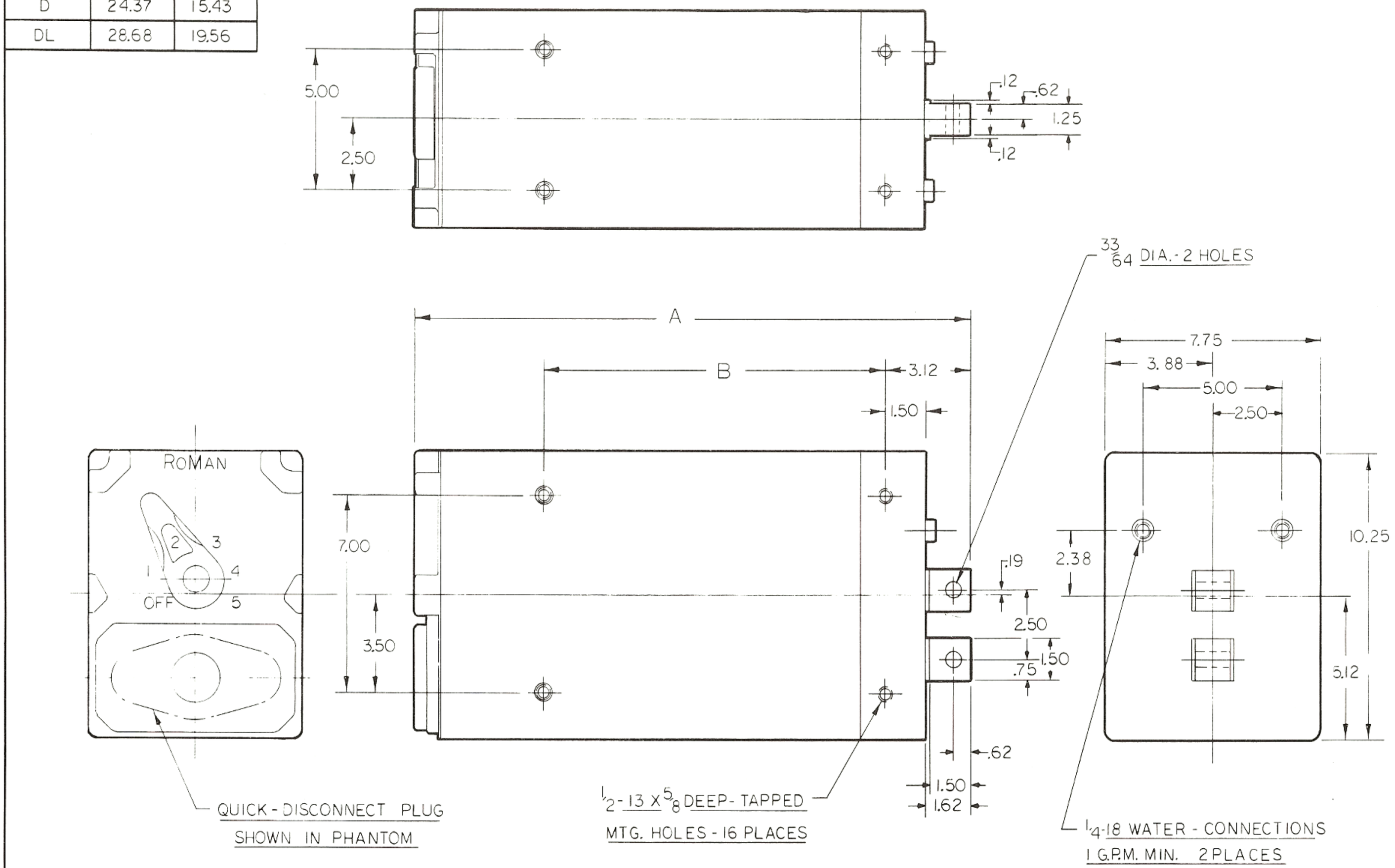

RoMan Manufacturing Inc.

FIXTURE TYPE TRANSFORMER

END-MOUNT TAP SWITCH INTERNALLY-PARALLELED
FRAME CROSS SECTION 7 3/4 X 10 1/4

DRAWING NO. R-1887
DATE: JAN, 1988

FRAME LETTER	DIM A	DIM B
C	24.00	12.93
D	26.50	15.43
F	27.31	16.25
DL	30.62	19.56

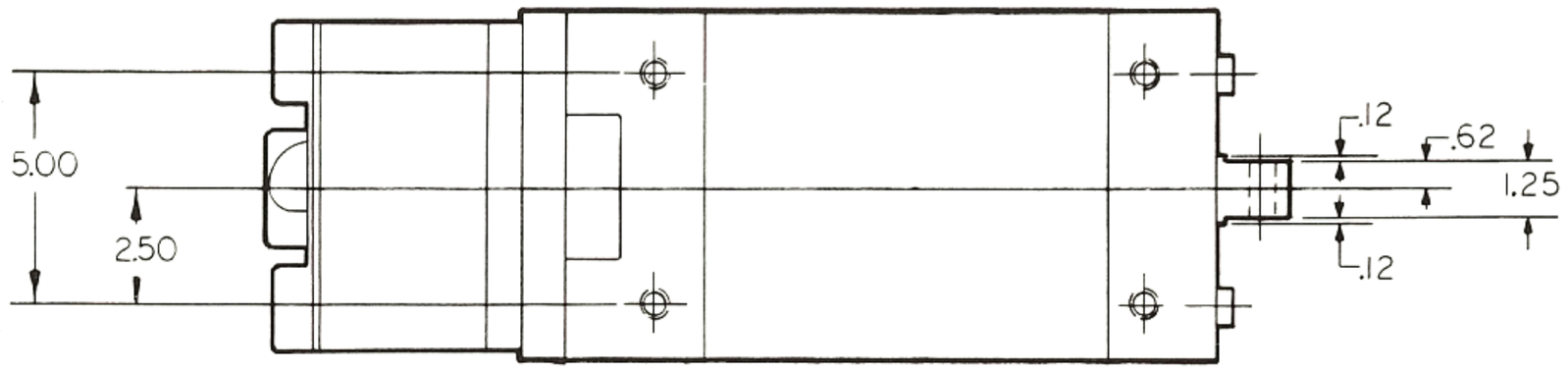

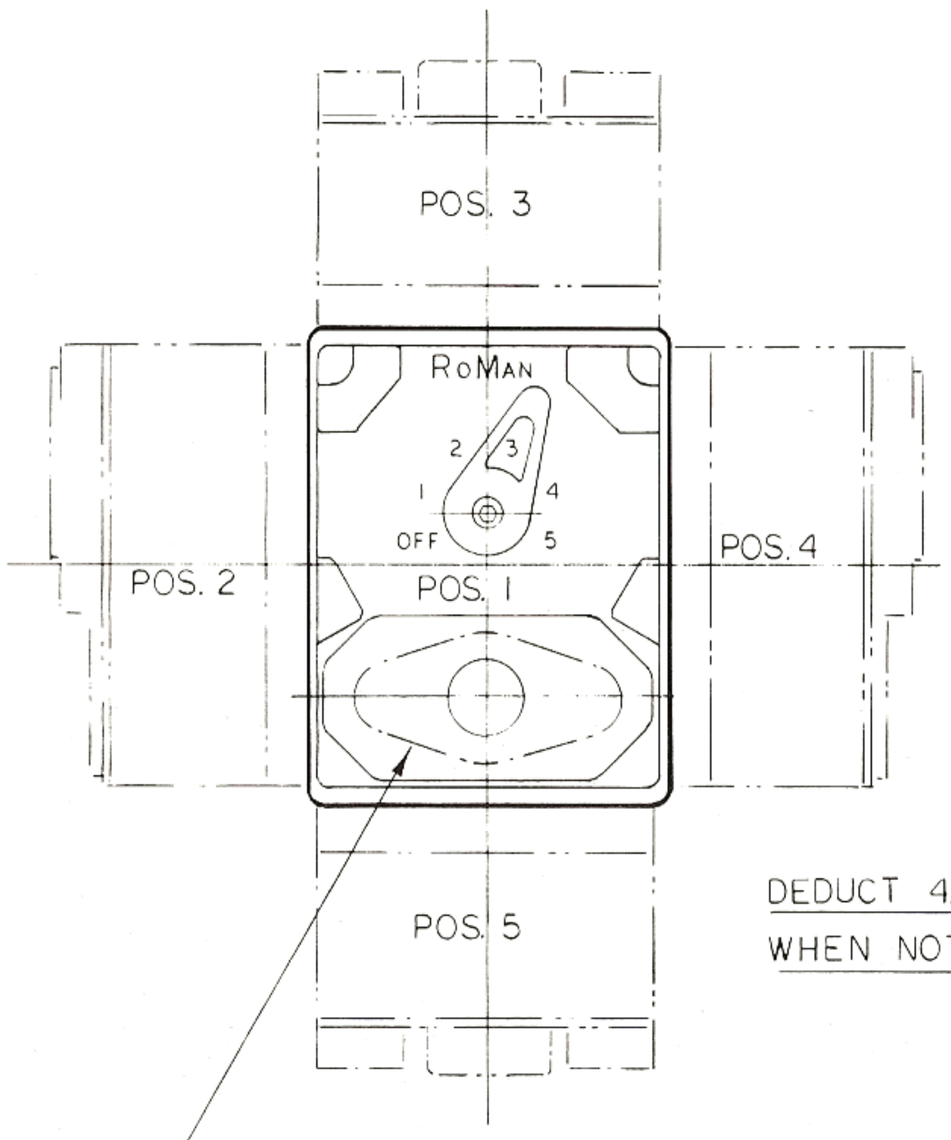

QUICK - DISCONNECT PLUG
SHOWN IN PHANTOM

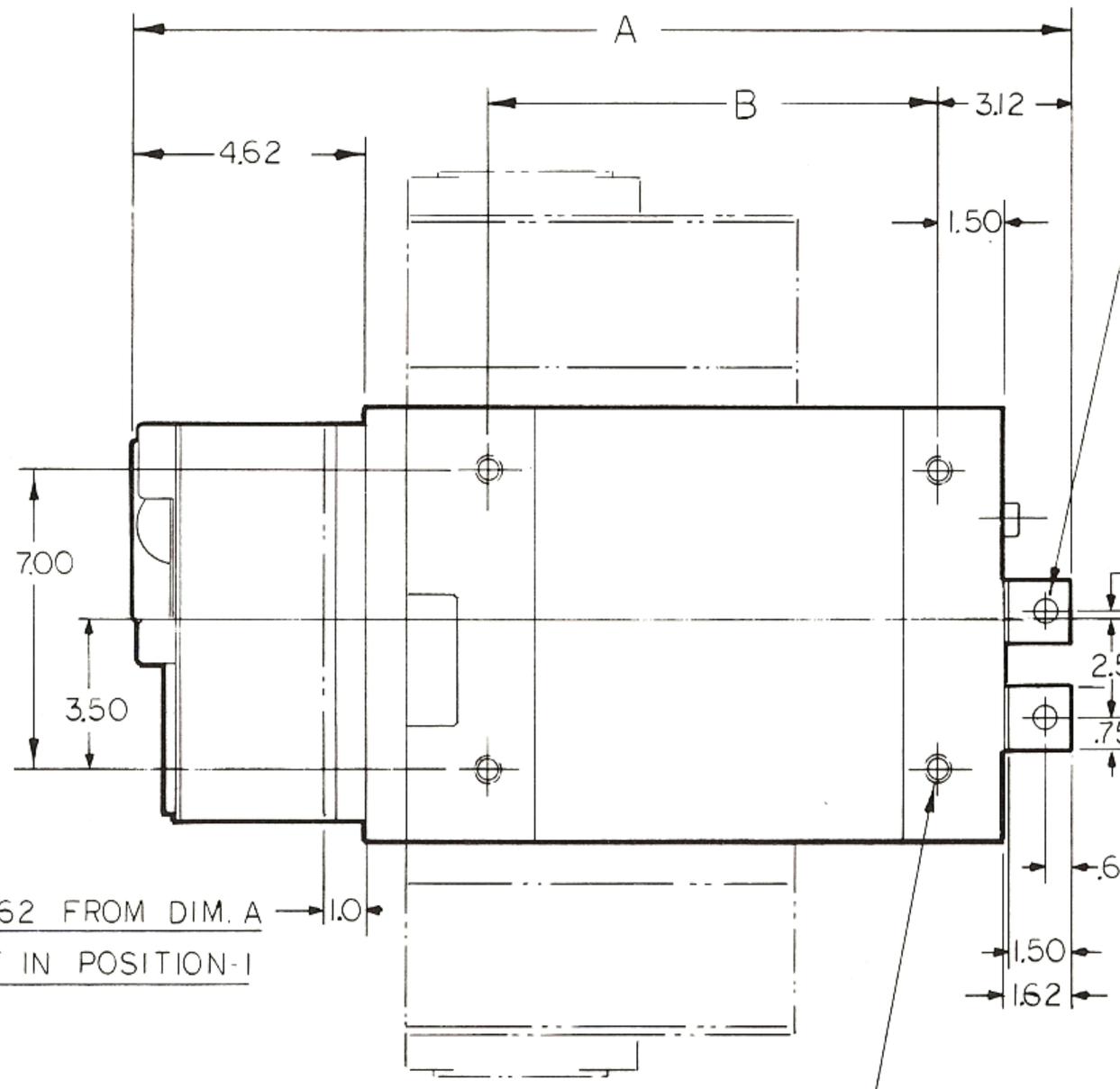

DEDUCT 4.62 FROM DIM. A
WHEN NOT IN POSITION-1

$\frac{1}{2}$-13 X $\frac{5}{8}$ DEEP - TAPPED
MTG. HOLES 16 PLACES

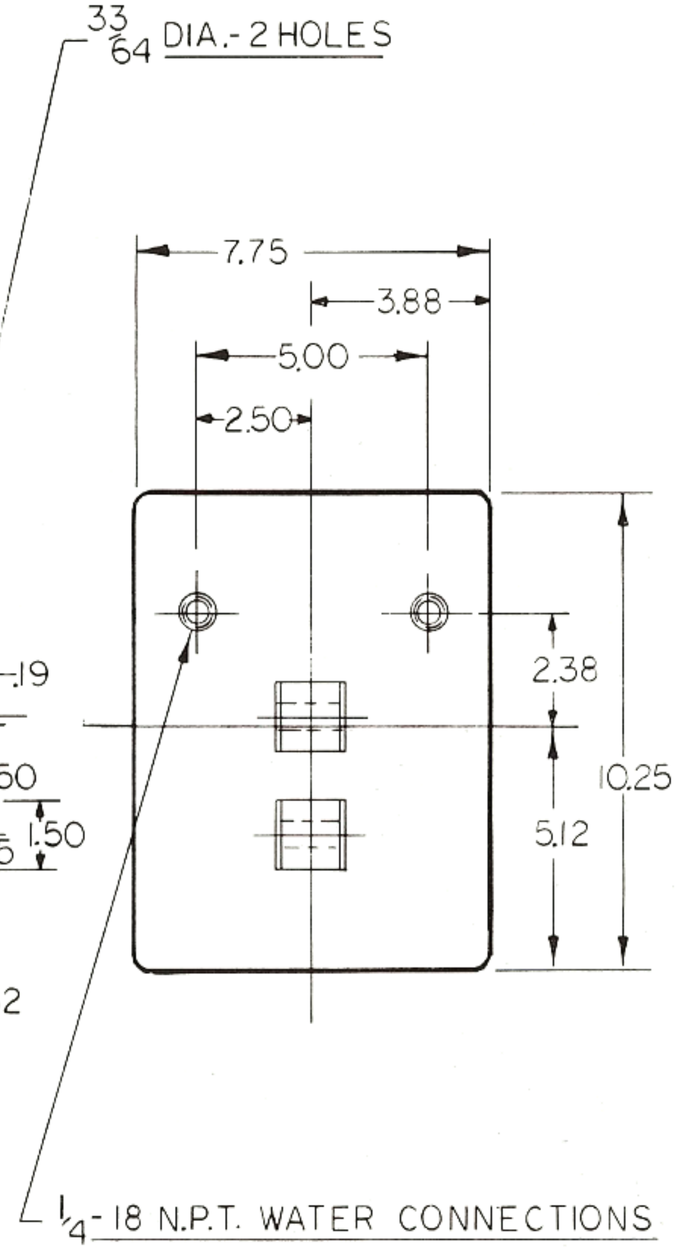

$\frac{1}{4}$-18 N.P.T. WATER CONNECTIONS
1 G.P.M. MIN.– 2 PLACES

RoMan Manufacturing Inc.

FIXTURE TYPE TRANSFORMER

5-WAY MOUNTED TAP-SWITCH INTERNALLY-PARALLELED
FRAME CROSS-SECTION $7\frac{3}{4}$ X $10\frac{1}{4}$

DRAWING NO. R-1888
DATE: JAN, 1988

BULLETIN F-5

Fixture Type Resistance Welding Transformers

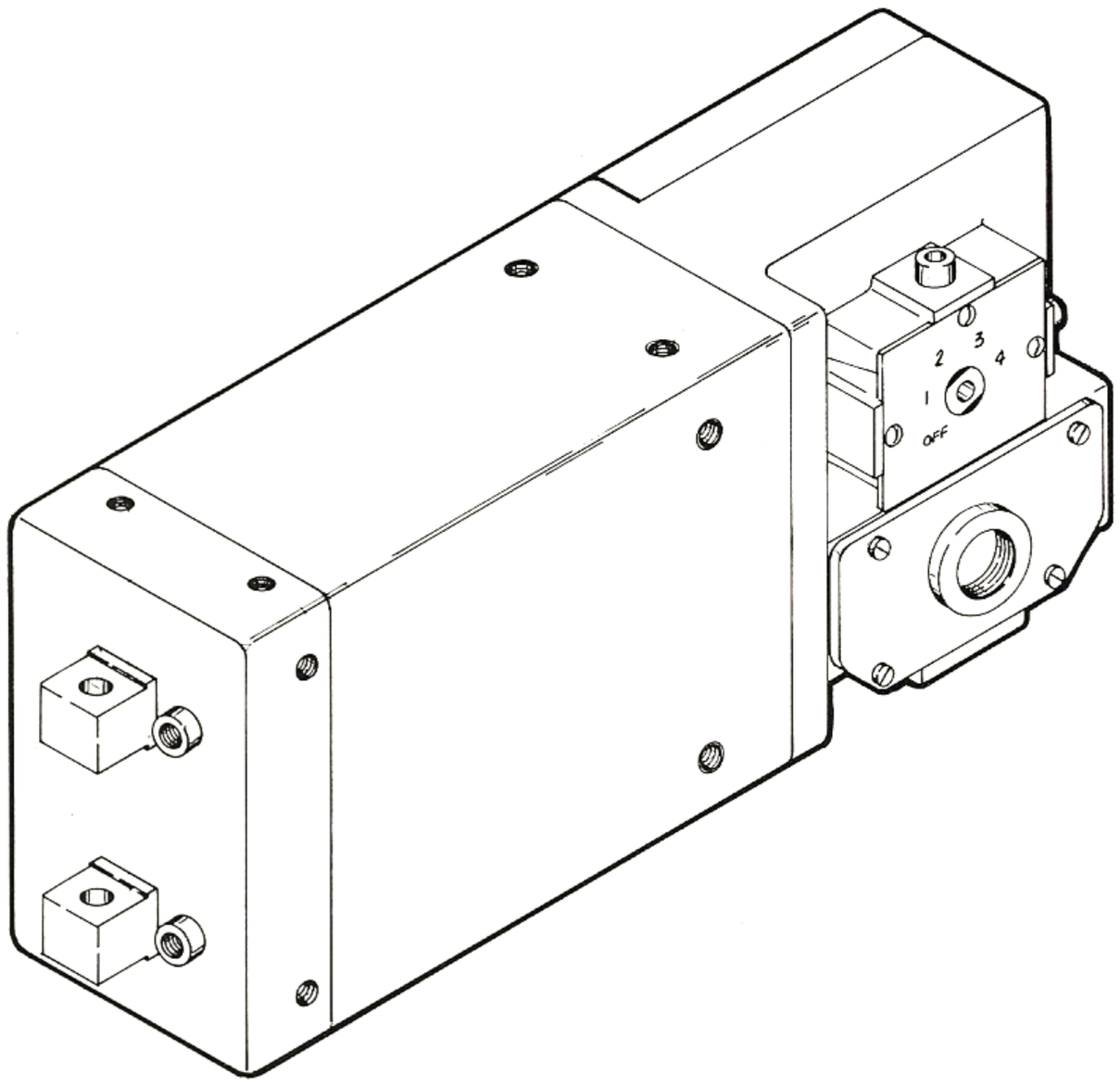

Content Of This Bulletin:

Fixture Type Transformer
Single Secondary
Frame Cross Section 5¾" x 9¼"
Wound Core 25 KVA to 80 KVA

Manufacturing Program

Fixture Type Transformers up to 200 KVA	Request "F" Series Bulletin
Portable Gun Type Transformers up to 200 KVA	Request "G" Series Bulletin
Machine Type Transformers up to 500 KVA	Request "M" Series Bulletin
Transgun/Robot Type Transformers	Request "T" Series Bulletin
Special Products	Request "S" Series Bulletin

RoMan Manufacturing Inc.
861 47th Street, S.W., Grand Rapids, MI 49509 (616) 530-8641

General Description:

- Fixture Type Transformer
- Single Secondary
- Universal Tap Switch
- Frame Cross Section 5¾'' x 9¼''

Ordering Instructions:

- Order by model number shown
- Add "X" to model number if transformer is to be fully potted

KVA RATING	SECONDARY VOLTAGE	NO. OF TAPS	TAP SWITCH	MODEL NUMBER		WEIGHT (LBS)	DWG. NO.	FRAME LETTER
				230V/60 Hz	460V/60 Hz			
25	3.6 to 5.0	4	Universal	F23625AS1GDW	F46625AS1GDW	103	R1088 Page 3	**AS**
35	4.6 to 6.0	4	Universal	F23635ES1GDW	F46635ES1GDW	114	R1088 Page 3	**ES**
45	5.5 to 7.0	4	Universal	F23645BS1GDW	F46645BS1GDW	138	R1088 Page 3	**BS**
65	7.2 to 9.0	4	Universal	F23665JS1GDW	F46665JS1GDW	165	R1088 Page 3	**JS**
80	9.2 to 11.5	4	Universal	F23680DS1GDWX Fully potted only.	F46680DS1GDWX Fully potted only.	206	R1088 Page 3	**DS**

Standard Features:

- Class "F" insulation
- Totally enclosed universal tap switch
- Secondary end positively sealed against contamination
- Solderless lug connections for primary wiring

Optional Features:

- Voltages and frequencies other than shown available on request
- Thermostats
- Stacked core available on request

FRAME LETTER	DIM "A"	DIM "B"
AS	21.00	8.00
ES	22.12	9.12
BS	24.00	11.00
JS	26.00	12.75
DS	29.00	15.62

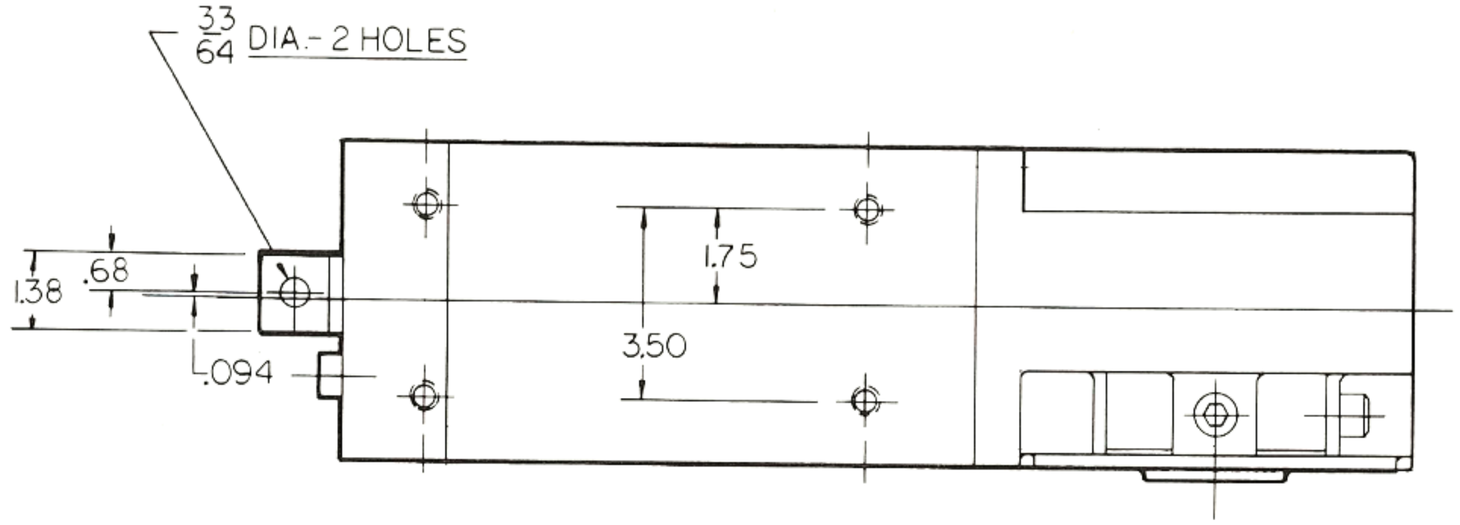

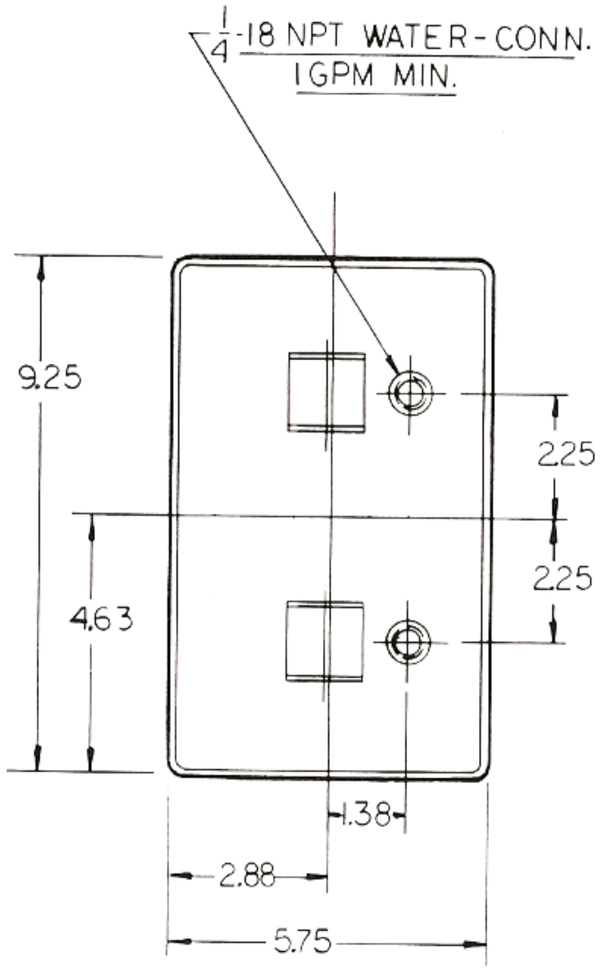

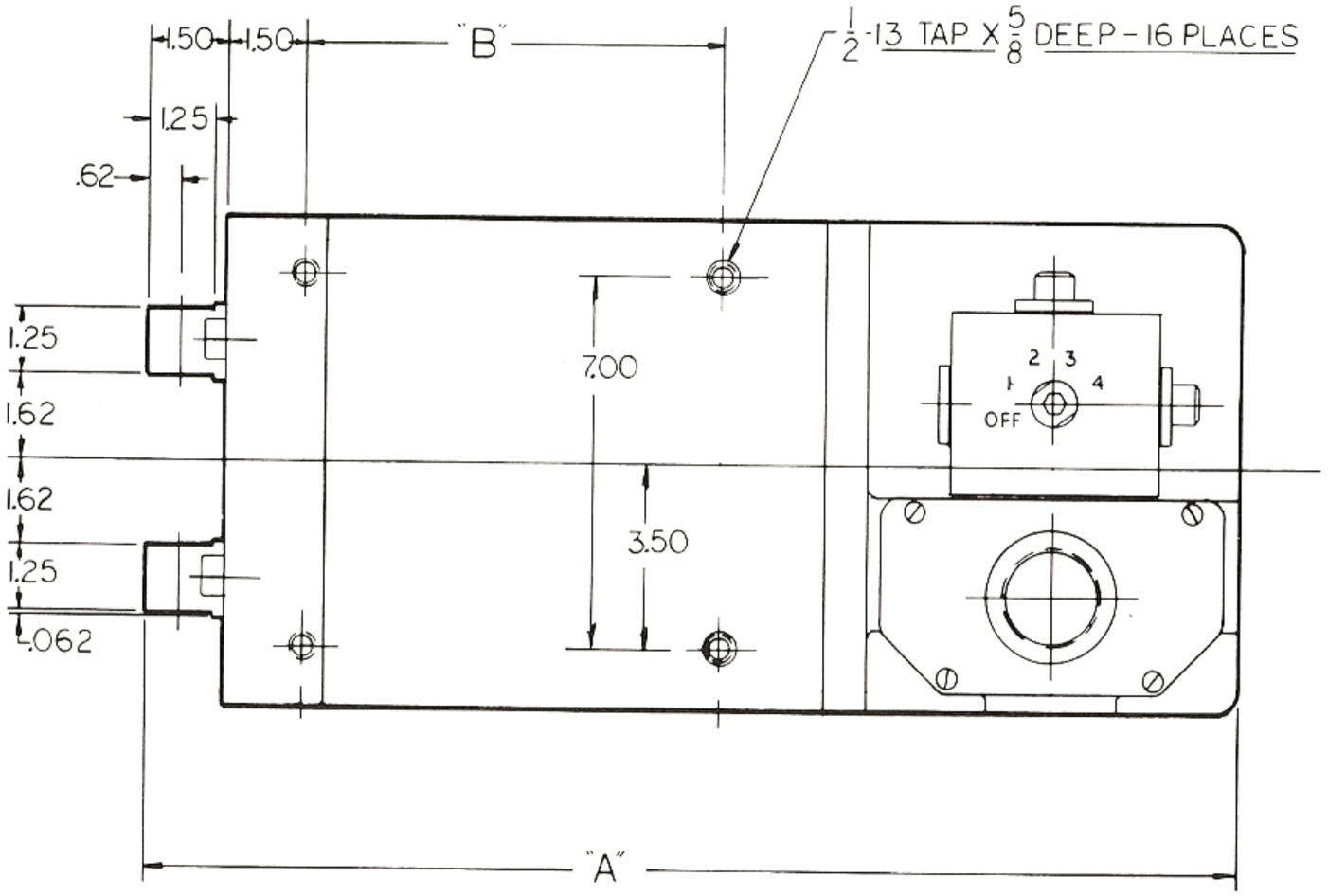

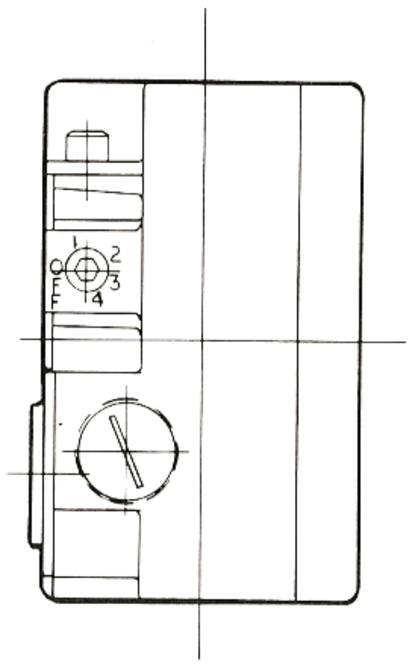

RoMan Manufacturing Inc.

FIXTURE TYPE TRANSFORMER

HALF-TRANSFORMER WITH UNIVERSAL TAP-SWITCH

FRAME CROSS-SECTION $5\frac{3}{4}$" X $9\frac{1}{4}$"

DRAWING NO. R1088

DATE : AUG. 15, 86

Portable Gun Type Transformers

Selection Tables & Mechanical Drawings

Portable Gun Type Transformers

RoMan Manufacturing Inc.

861 47th Street, S.W. Grand Rapids, MI 49509 (616) 530-8641

Portable Gun Type Transformers

Quick Selector Chart

DESCRIPTION	BULLETIN
Frame Cross Section 9½″ x 13⅜″ Stacked Core From 50 KVA to 120 KVA	G-1
Frame Cross Section 12½″ x 13⅜″ Stacked Core from 150 KVA to 200 KVA	G-2

BULLETIN G-1

Portable Gun Type Resistance Welding Transformers

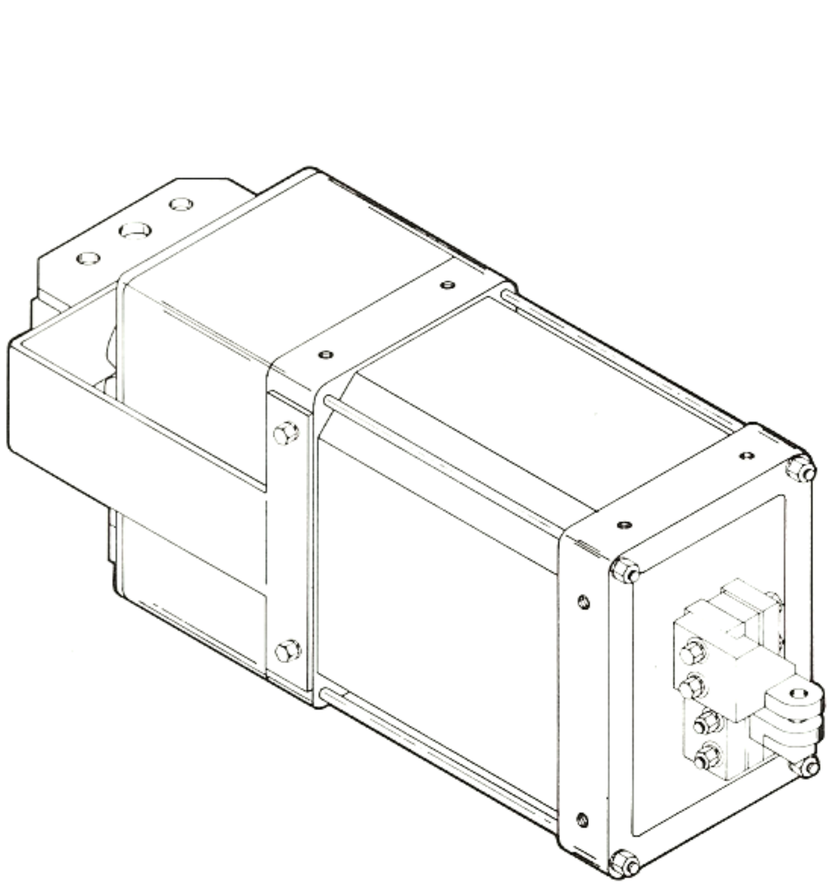

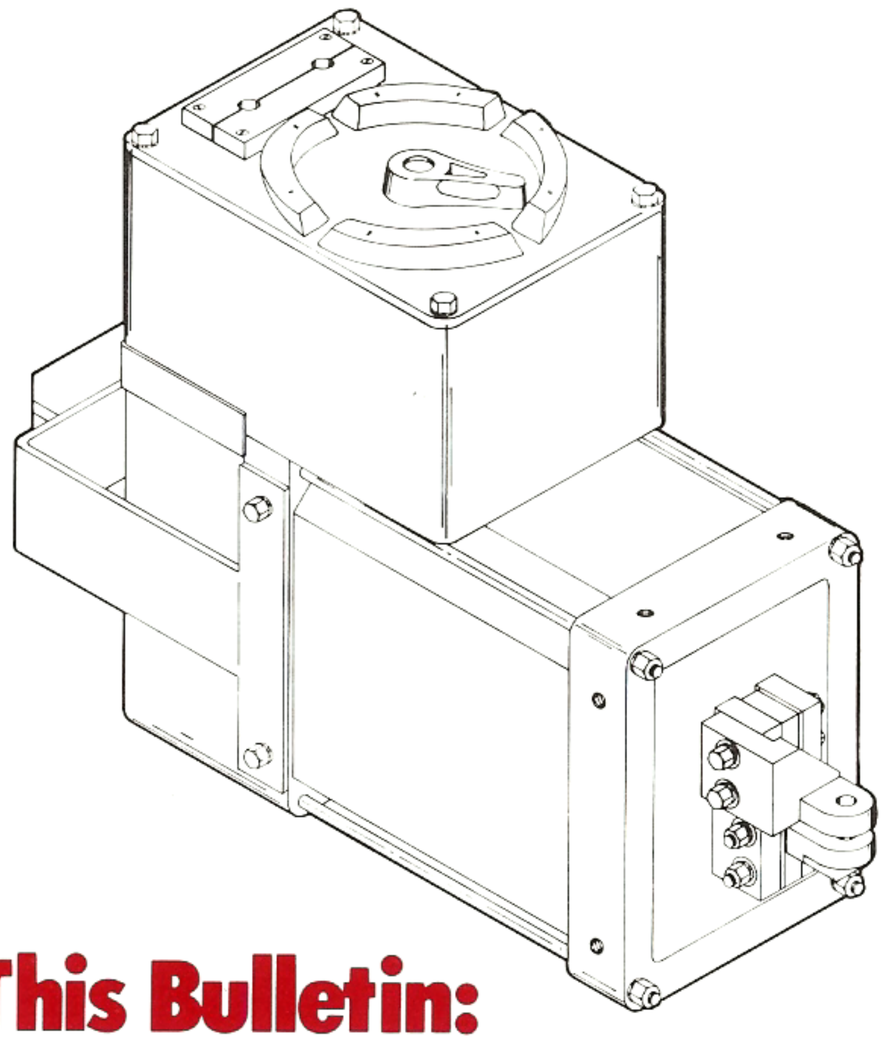

Content Of This Bulletin:

Portable Gun Type Transformer
Frame Cross Section 9½" x 13⅜"

Stacked Core
50 KVA to 120 KVA

Manufacturing Program

Fixture Type Transformers up to 200 KVA	Request "F" Series Bulletin
Portable Gun Type Transformers up to 200 KVA	Request "G" Series Bulletin
Machine Type Transformers up to 500 KVA	Request "M" Series Bulletin
Transgun/Robot Type Transformers	Request "T" Series Bulletin
Special Products	Request "S" Series Bulletin

RoMan
Manufacturing Inc.
861 47th Street, S.W., Grand Rapids, MI 49509 (616) 530-8641

General Description:

- Portable Gun Type Transformer
- Stacked Core
- Frame Cross Section 9½" x 13⅜"

Ordering Instructions:

- Order by model number shown
- Specify desired kickless cable adaptor spacing ¾" or $1^{1}/_{16}$"
- Specify "primary conduit opening" or "primary cable clamp block" ("primary cable clamp block" furnished standard)

KVA RATING	SECONDARY VOLTAGE		NO. OF TAPS	TAP SWITCH LOCATION	MODEL NUMBER		WEIGHT APPROX.	DWG. NO.	FRAME LETTER
	IN PARALLEL	IN SERIES			220V/60 Hz	440V/60 Hz			
50	4.0 to 7.9 VOLTS	8.0 to 15.8 VOLTS	12	End Mount	G22650NB1BGL	G44650NB1BGL	335 lbs.	R1309 Page 3	NB
				Side Mount	G22650NB1FGL	G44650NB1FGL	355 lbs.	R1310 Page 4	
50	3.6 to 10.0 VOLTS	7.2 to 20.0 VOLTS	16	End Mount	G22650NL1BGL	G44650NL1BGL	385 lbs.	R1309 Page 3	NL
				Side Mount	G22650NL1FGL	G44650NL1FGL	405 lbs.	R1310 Page 4	
75 RWMA TYPE G-1	5.7 to 10.0 VOLTS	11.4 to 20.0 VOLTS	16	End Mount	G22675NL1BGL	G44675NL1BGL	385 lbs.	R1309 Page 3	NL
				Side Mount	G22675NL1FGL	G44675NL1FGL	405 lbs.	R1310 Page 4	
100	6.8 to 10.0 VOLTS	13.6 to 20.0 VOLTS	12	End Mount	G226100NL1BGL	G446100NL1BGL	385 lbs.	R1309 Page 3	NL
				Side Mount	G226100NL1FGL	G446100NL1FGL	405 lbs.	R1310 Page 4	
120	7.3 to 12.2 VOLTS	14.6 to 24.4 VOLTS	16	End Mount	G226120NA1BGL	G446120NA1BGL	445 lbs.	R1309 Page 3	NA
				Side Mount	G226120NA1FGL	G446120NA1FGL	465 lbs.	R1310 Page 4	

NOTE: Weight Includes Hanger and Cable Adaptors

Standard Features:

- Class "F" insulation
- Transformers are supplied with kickless cable adaptors
- Transformers are supplied with hanger
- Series and parallel secondary connection bars
- Solderless lug connections for primary wiring

Optional Features:

- Voltages and frequencies other than shown available on request
- Dual kickless cable adaptors
- Thermostats
- Ground reactors

FRAME LETTER	DIM. "A	DIM. "B
NL	30.81	11.87
NA	33.06	14.12
NB	28.93	10.00

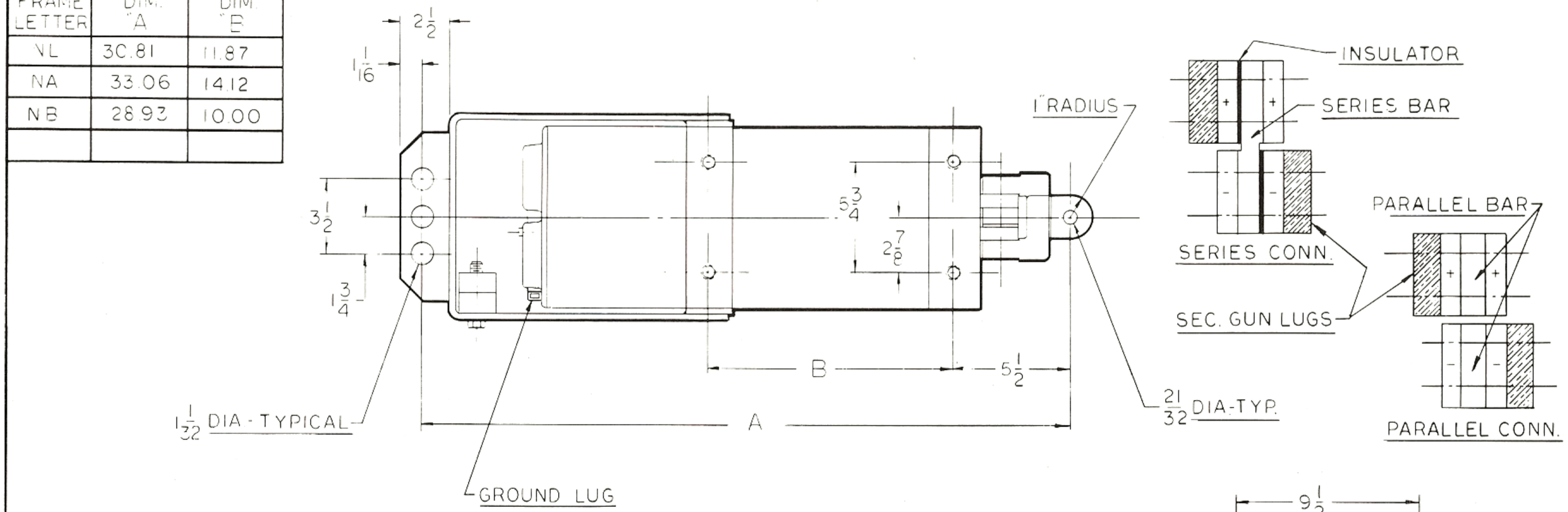

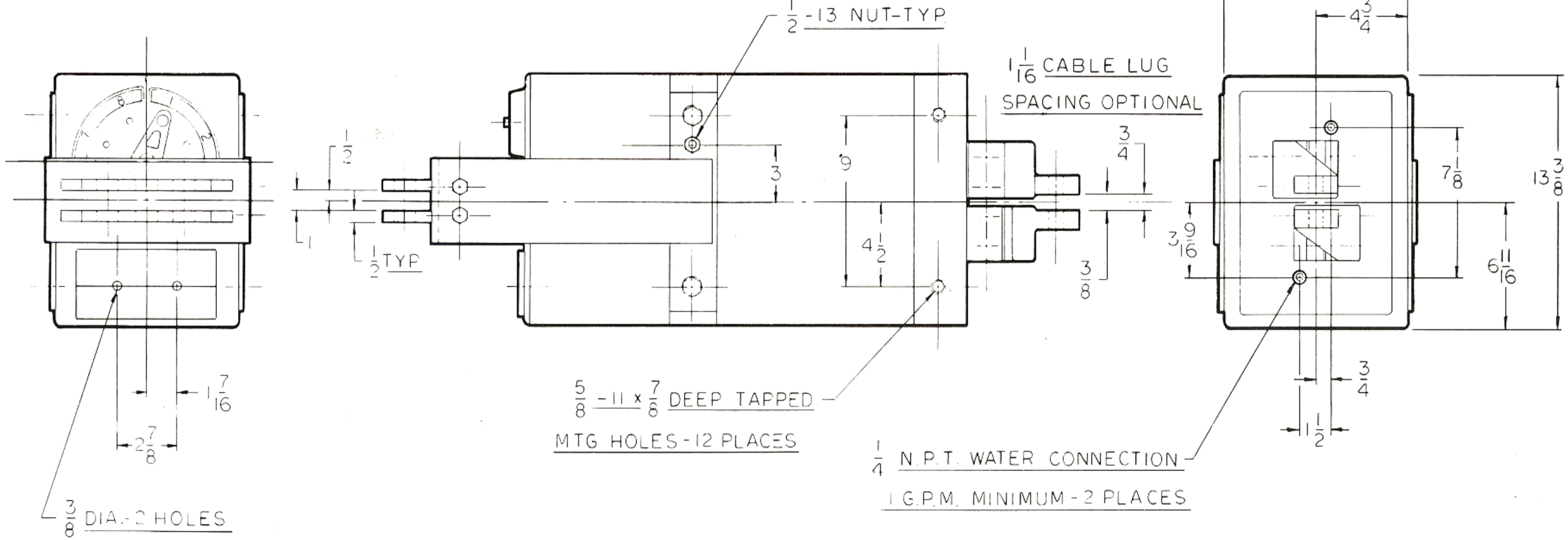

RoMan Manufacturing Inc.

PORTABLE GUN TYPE TRANSFORMER

TAP SWITCH: END MOUNT

FRAME CROSS SECTION: 9 1/2" x 13 3/8"

DRAWING NO. R1309

DATE: JAN., 1993

FRAME LETTER	DIM. "A"	DIM. "B"
NL	30.81	11.87
NA	33.06	14.12
NB	28.93	10.00

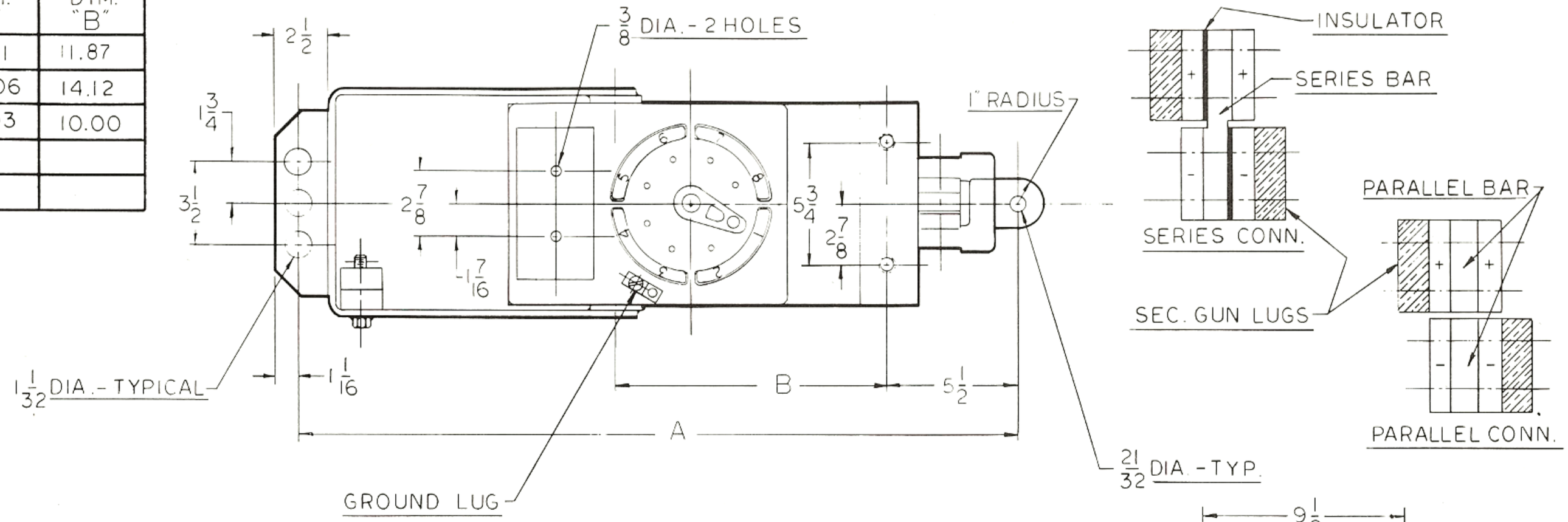

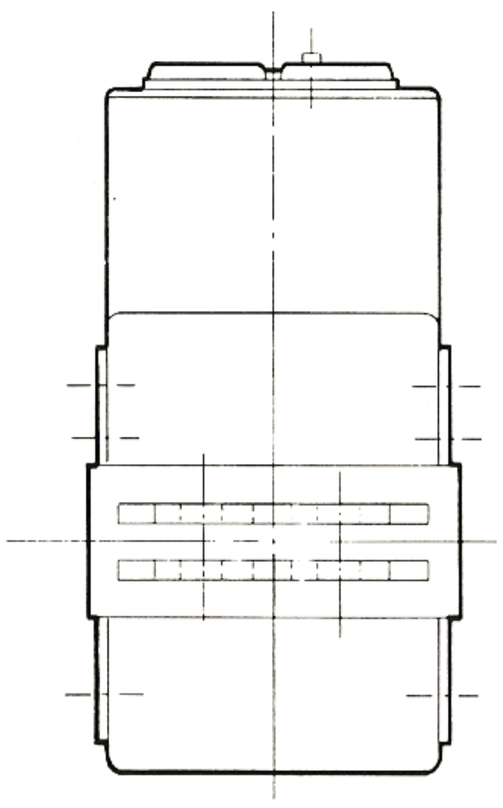

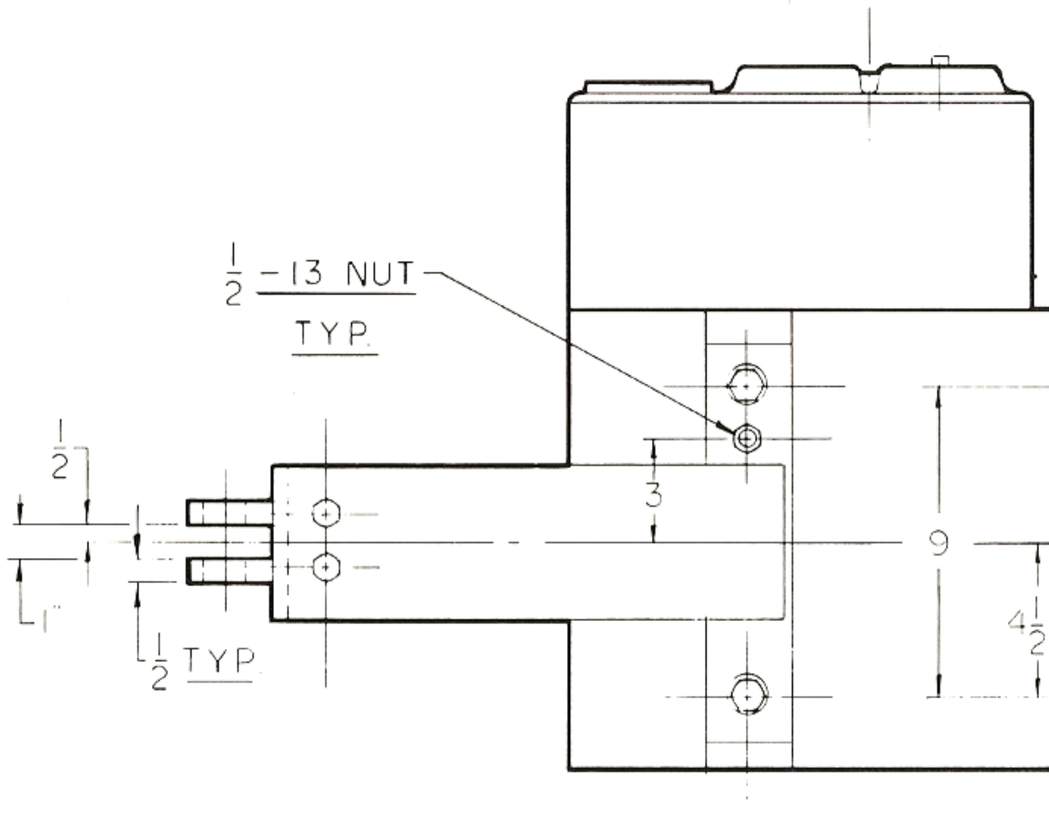

1 1/16 CABLE LUG
SPACING OPTIONAL

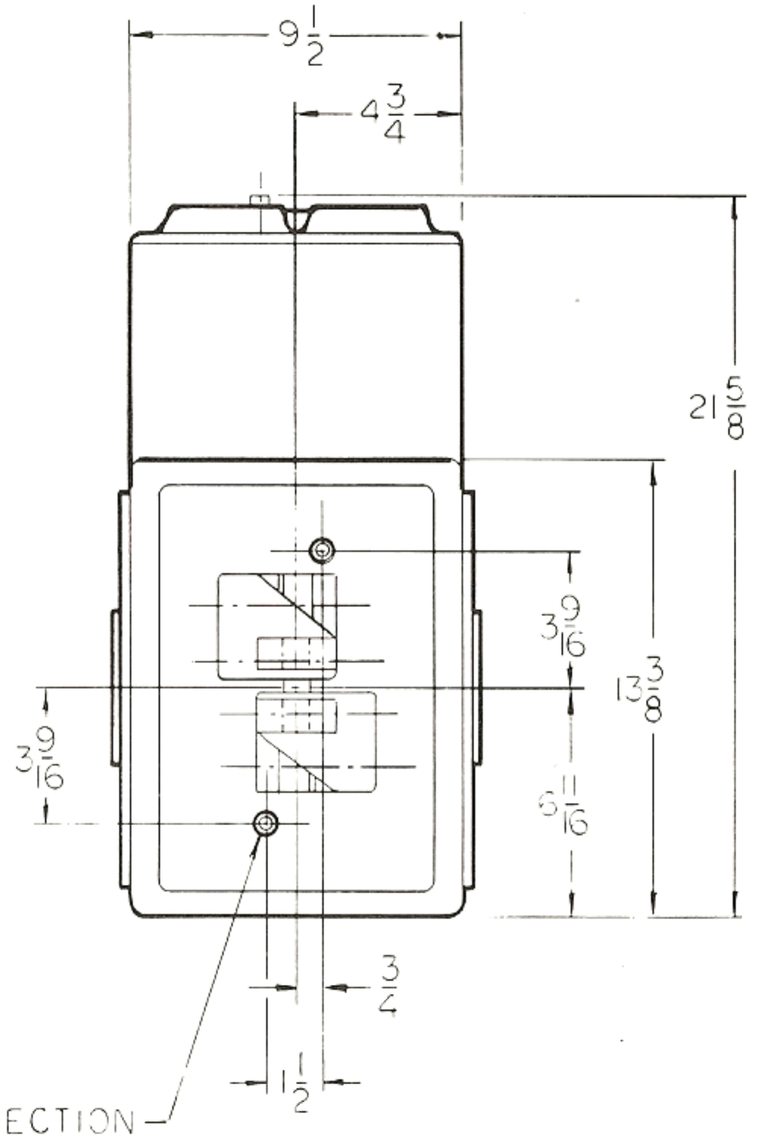

RoMan Manufacturing Inc.

PORTABLE GUN TYPE TRANSFORMER

TAP SWITCH: SIDE MOUNT

FRAME CROSS SECTION: 9 1/2" x 13 3/8"

DRAWING NO. R1310

DATE: JAN., 1983

BULLETIN G-2

Portable Gun Type Resistance Welding Transformers

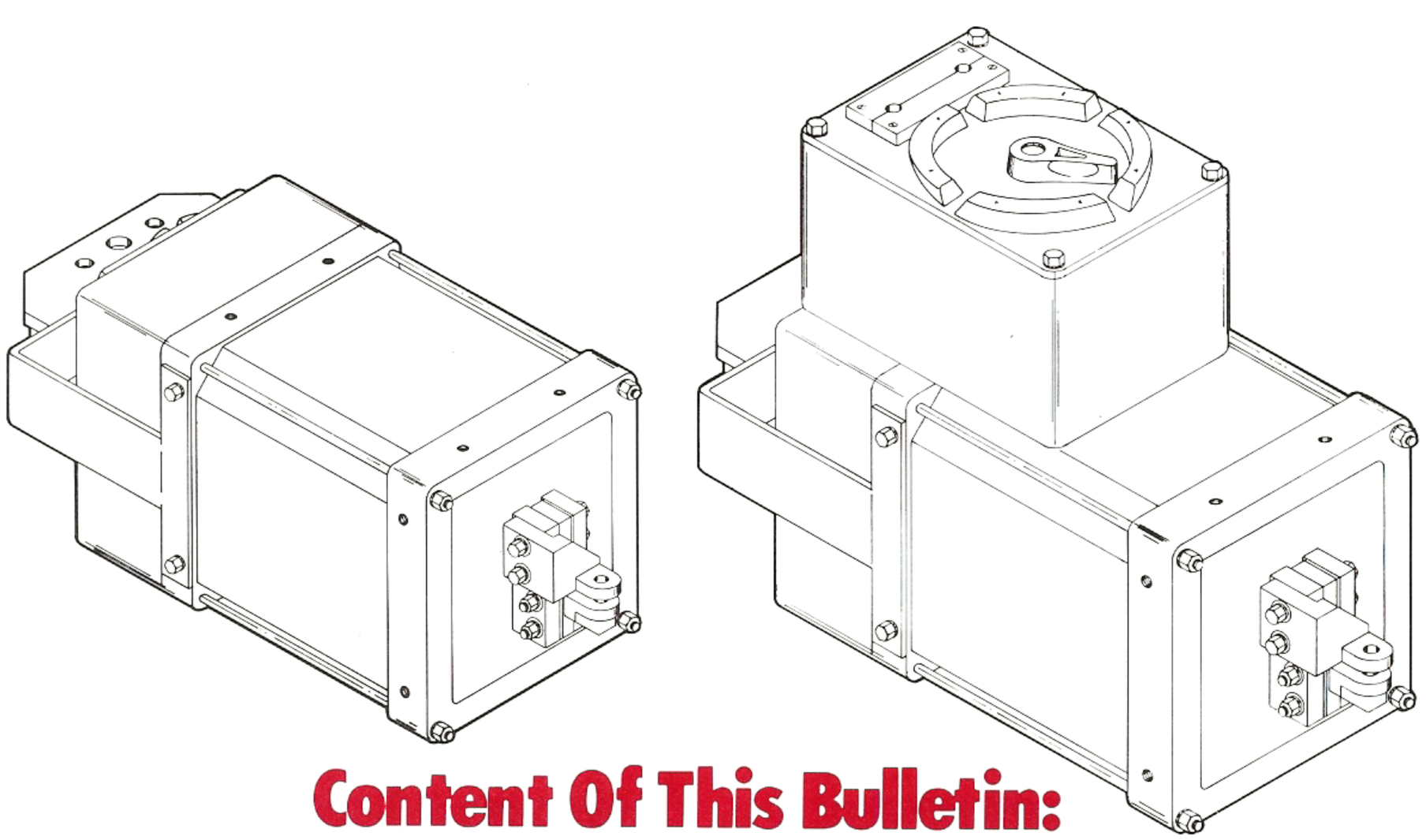

Content Of This Bulletin:

Portable Gun Type Transformer
Frame Cross Section 12½" x 13⅜"
Stacked Core
150 KVA to 200 KVA

Manufacturing Program

Fixture Type Transformers up to 200 KVA	Request "F" Series Bulletin
Portable Gun Type Transformers up to 200 KVA	Request "G" Series Bulletin
Machine Type Transformers up to 500 KVA	Request "M" Series Bulletin
Transgun/Robot Type Transformers	Request "T" Series Bulletin
Special Products	Request "S" Series Bulletin

RoMan Manufacturing Inc.
861 47th Street, S.W., Grand Rapids, MI 49509 (616) 530-8641

General Description:

- Portable Gun Type Transformer
- Stacked Core
- Frame Cross Section 12½″ x 13⅜″

Ordering Instructions:

- Order by model number shown
- Specify desired kickless cable adaptor spacing ¾″ or $1^{1}/_{16}$″
- Specify "primary conduit opening" or "primary cable clamp block" ("primary cable clamp block" furnished standard)

KVA RATING	SECONDARY VOLTAGE		NO. OF TAPS	TAP SWITCH LOCATION	MODEL NUMBER		WEIGHT APPROX.	DWG. NO.	FRAME LETTER
	IN PARALLEL	IN SERIES			220V/60 Hz	440V/60 Hz			
150	6.4 to 11.0 VOLTS	12.8 to 22.0 VOLTS	16	End Mount	G226150PL1BGL	G446150PL1BGL	556 lbs.	R1311 Page 3	PL
				Side Mount	G226150PL1FGL	G446150PL1FGL	576 lbs.	R1312 Page 4	
200	7.6 to 11.3 VOLTS	15.2 to 22.6 VOLTS	16	End Mount		G446200PL1BGL	556 lbs.	R1311 Page 3	PL
				Side Mount		G446200PL1FGL	576 lbs.	R1312 Page 4	
200	7.8 to 12.9 VOLTS	15.6 to 25.8 VOLTS	16	End Mount		G446200PA1BGL	660 lbs.	R1311 Page 3	PA
				Side Mount		G446200PA1FGL	680 lbs.	R1312 Page 4	

NOTE: Weight Includes Hanger and Cable Adaptors

Standard Features:

- Class "F" insulation
- Transformers are supplied with kickless cable adaptors
- Transformers are supplied with hanger
- Series and parallel secondary connection bars
- Solderless lug connections for primary wiring

Optional Features:

- Voltages and frequencies other than shown available on request
- Dual kickless cable adaptors
- Thermostats
- Ground reactors

FRAME LETTER	DIM. "A"	DIM. "B"
PL	31.81	12.87
PA	34.06	15.12

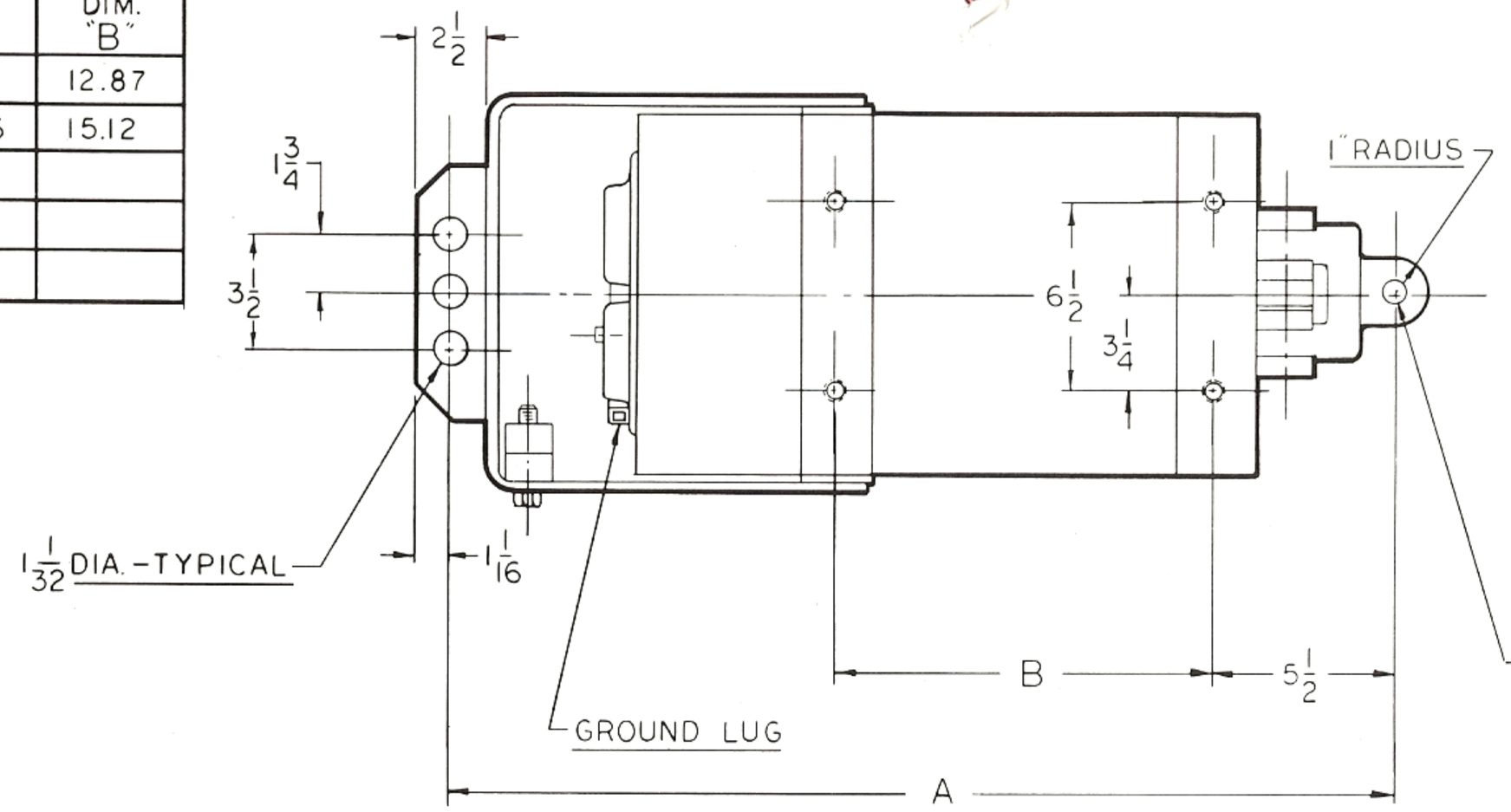

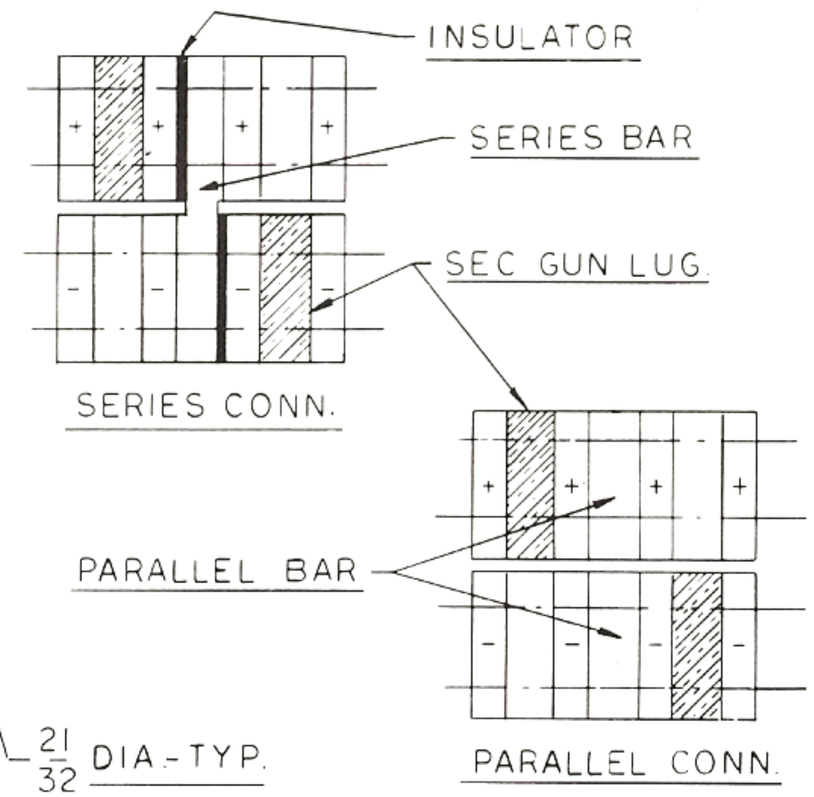

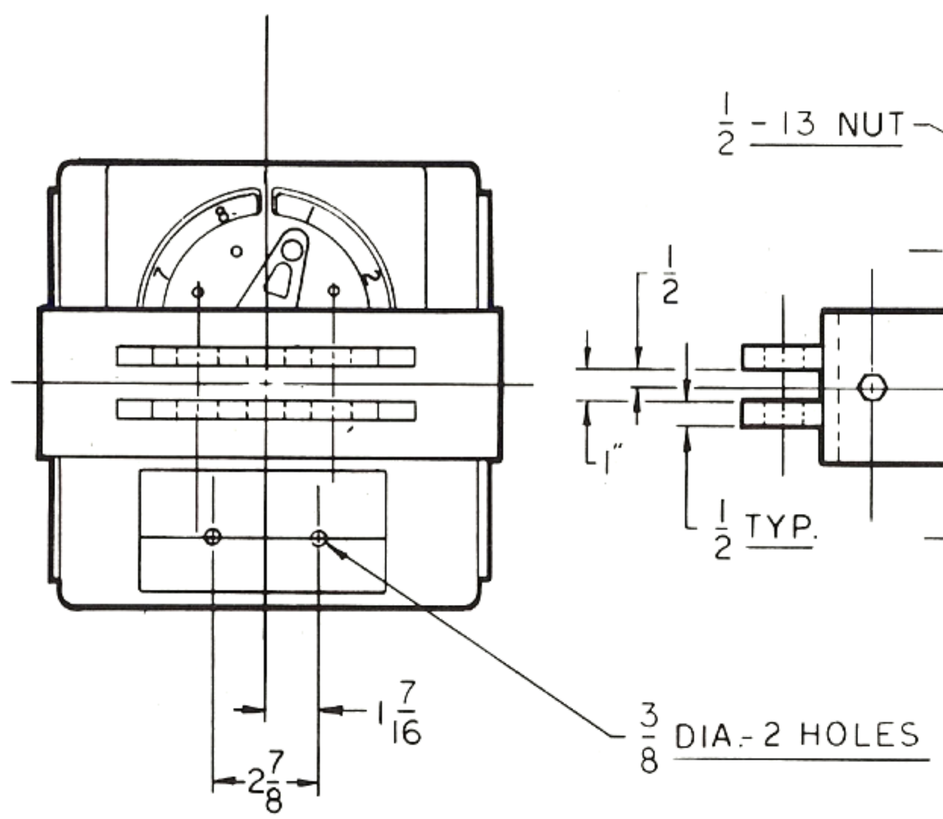

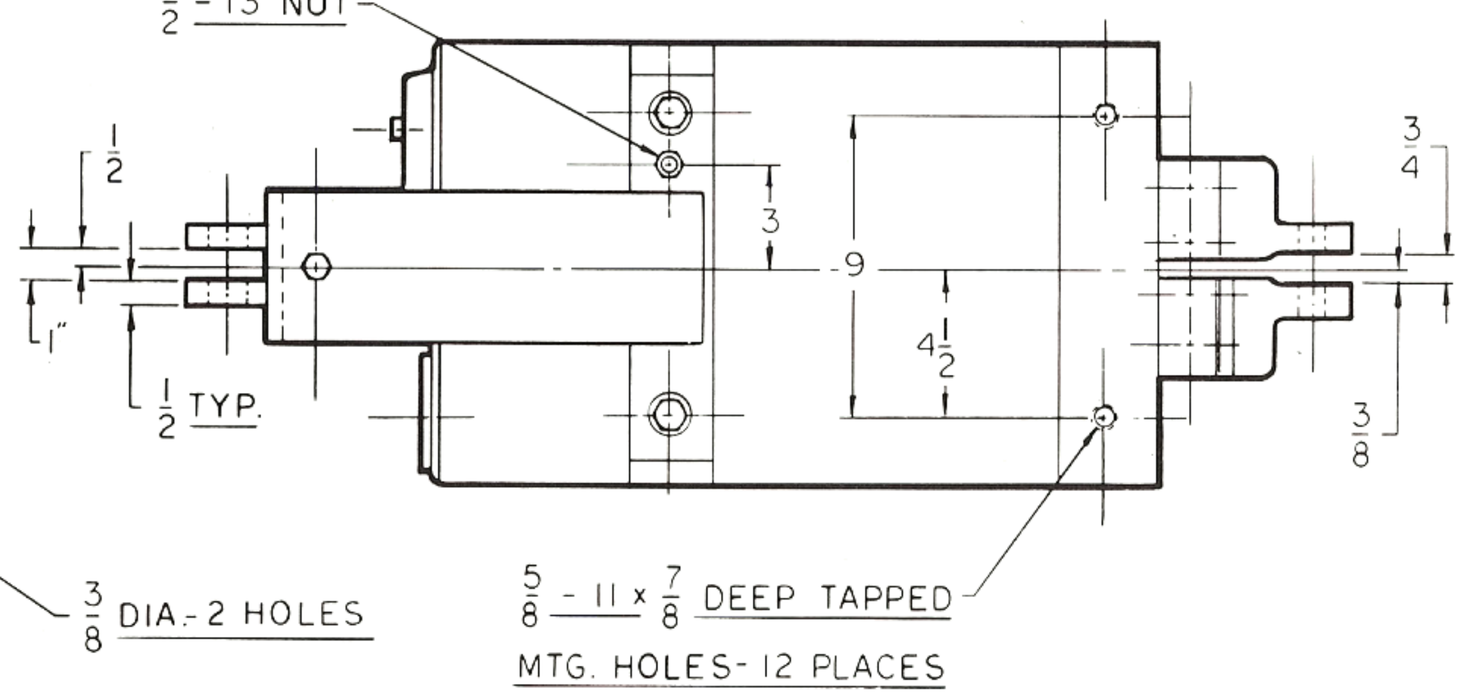

1 1/16 CABLE LUG
SPACING OPTIONAL

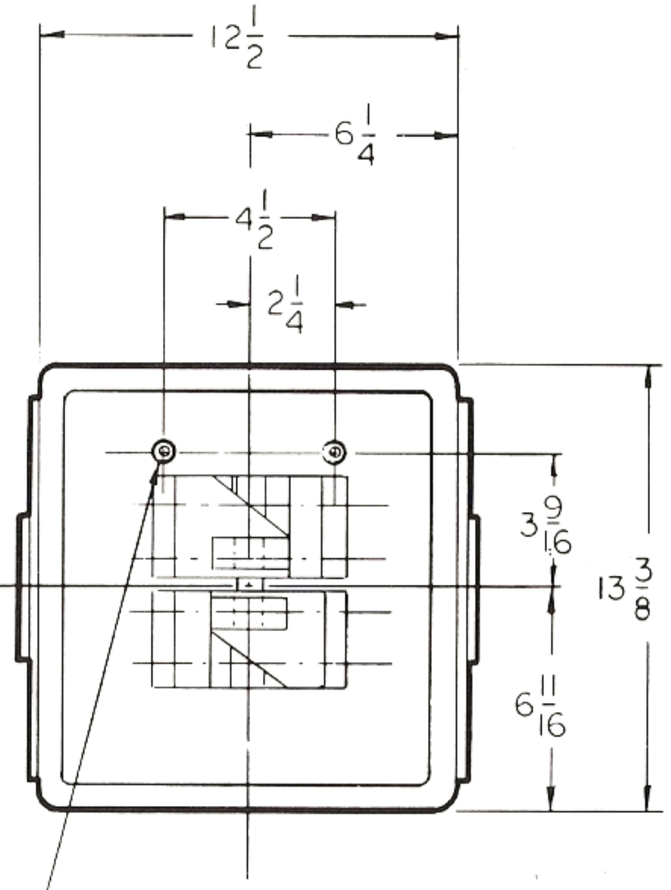

RoMan Manufacturing Inc.

PORTABLE GUN TYPE TRANSFORMER

TAP SWITCH : END MOUNT

FRAME CROSS SECTION 12 1/2" x 13 3/8"

DRAWING NO. R1311

DATE FEB., 1983

FRAME LETTER	DIM. "A"	DIM. "B"
PL	31.81	12.87
PA	34.06	15.12

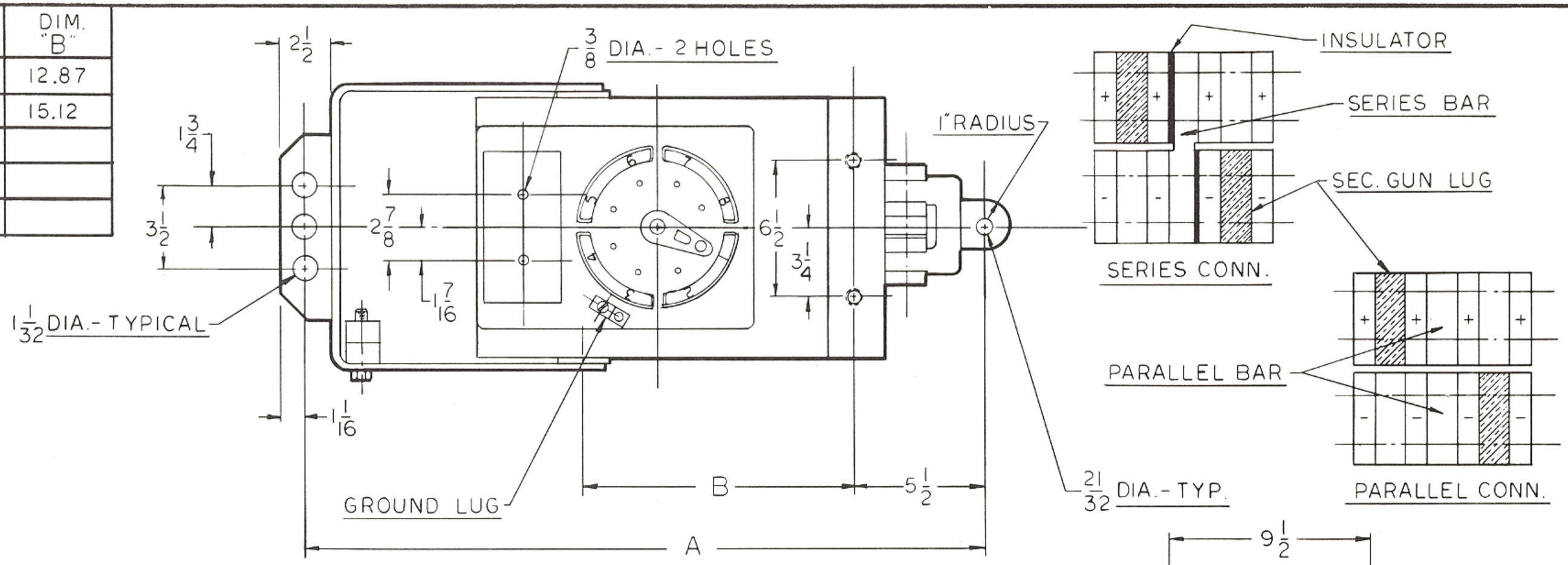

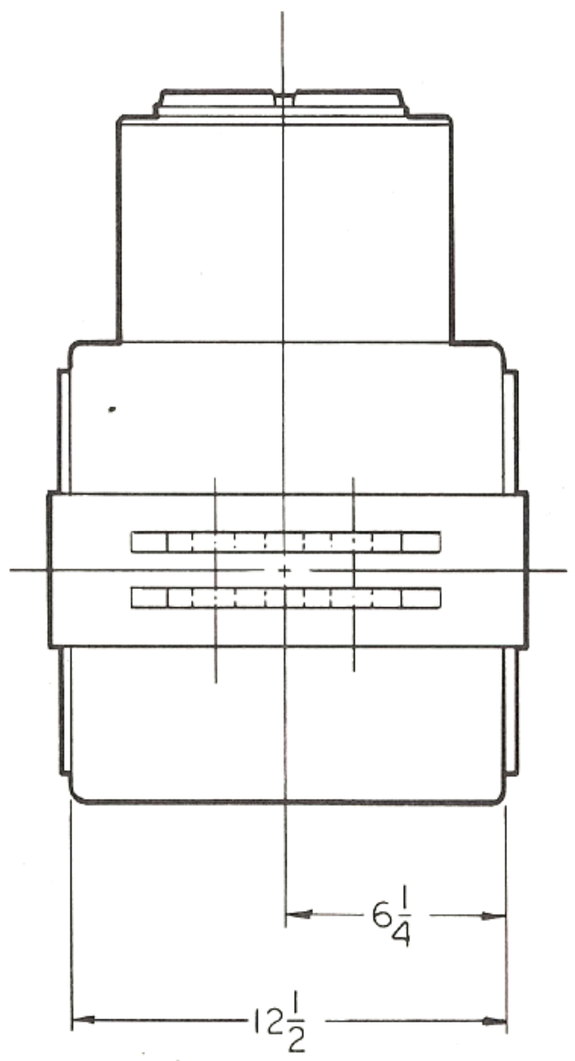

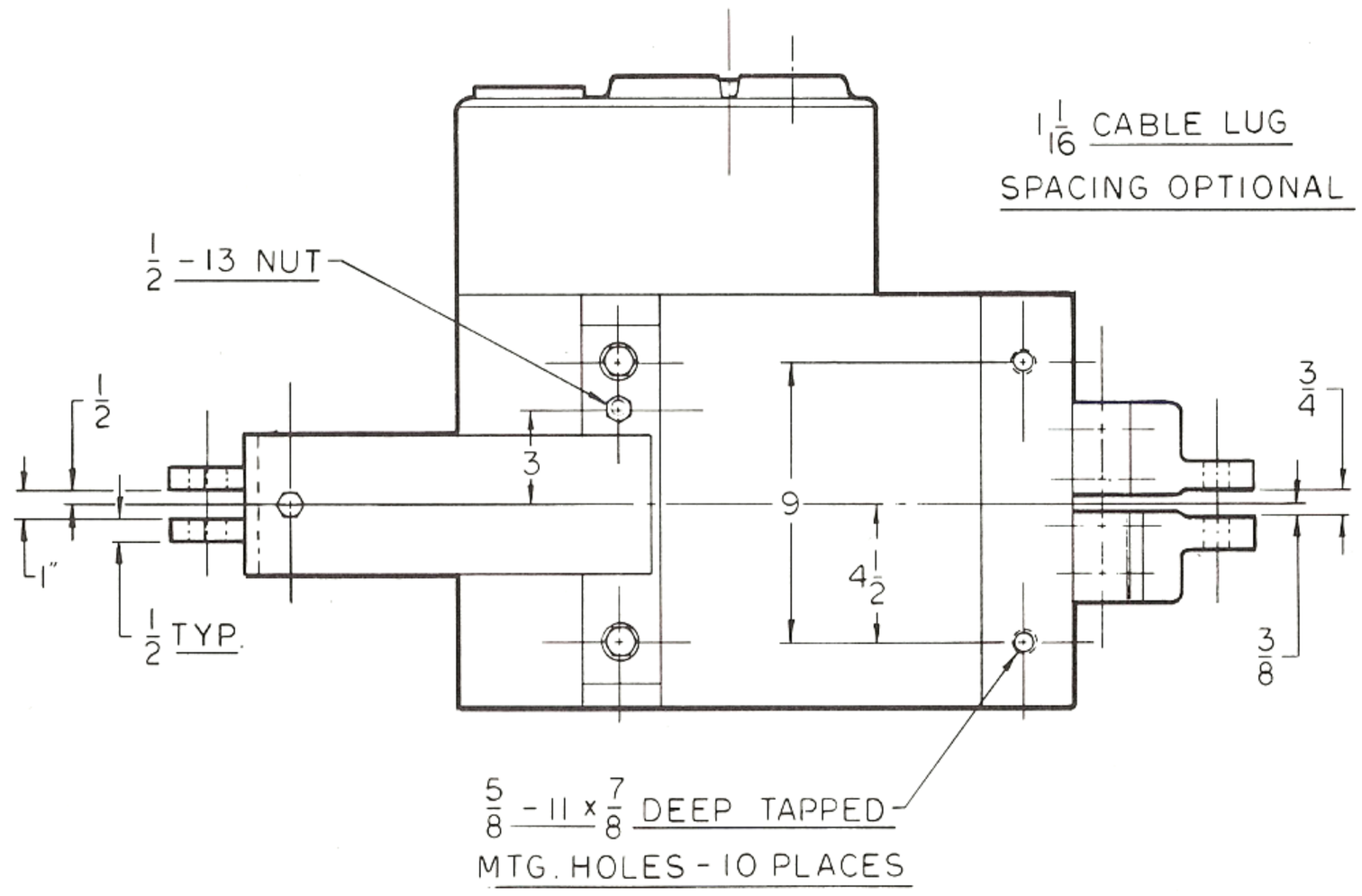

1 1/16 CABLE LUG
SPACING OPTIONAL

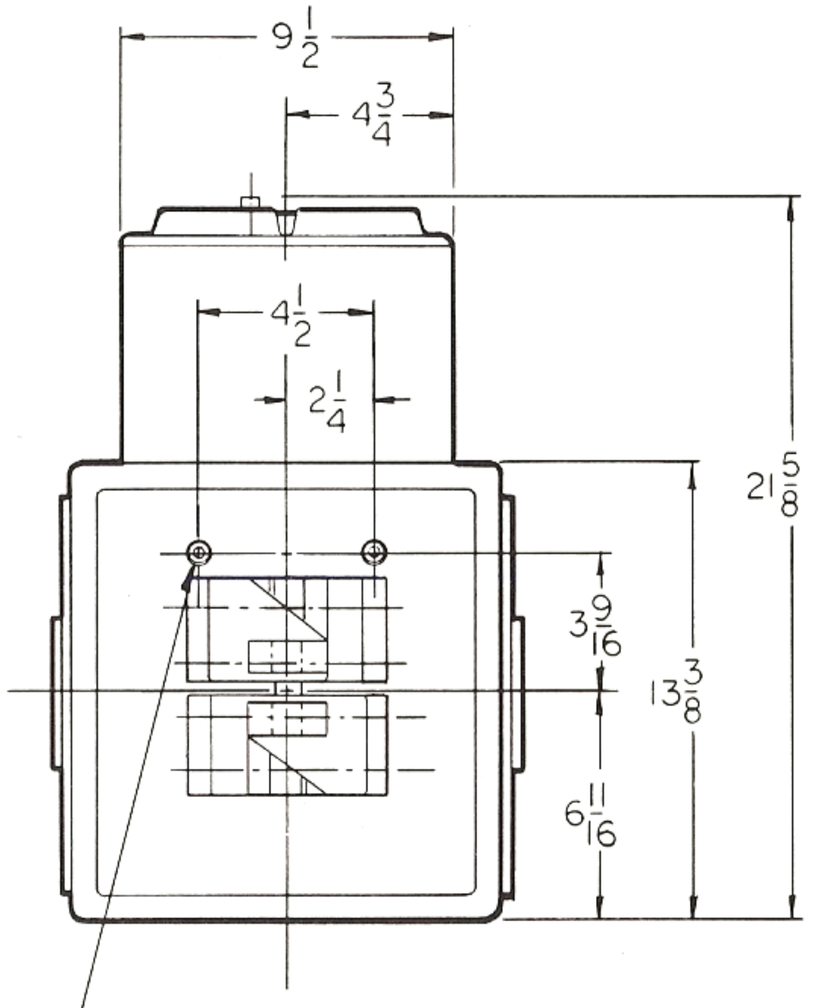

RoMan Manufacturing Inc.

PORTABLE GUN TYPE TRANSFORMER

TAP SWITCH: SIDE MOUNT

FRAME CROSS SECTION: 12 1/2" x 13 3/8"

DRAWING NO. R1312

DATE: FEB., 1983

Machine Type Transformers

Selection Tables & Mechanical Drawings

Machine Type Transformers

RoMan

Manufacturing Inc.

861 47th Street, S.W. Grand Rapids, MI 49509 (616) 530-8641

Machine Type Transformers

Quick Selector Chart

DESCRIPTION	BULLETIN
Frame Cross Section 7¼″ x 9¼″ RWMA Size 1 Secondary Pads Wound Core from 30 KVA to 50 KVA Stacked Core from 20 KVA to 50 KVA	M-1
Frame Cross Section 9½″ x 13⅜″ RWMA Size 1 and 2 Secondary Pads Stacked Core from 50 KVA to 100 KVA	M-2
Frame Cross Section 10¾'' x 13⅜'' RWMA Size 1 and 2 Secondary Pads Stacked Core from 100 KVA to 125 KVA	M-2.1
Frame Cross Section 12½″ x 13⅜″ RWMA Size 2 and 3 Secondary Pads Stacked Core from 150 KVA to 200 KVA	M-3
Frame Cross Section 13⅜″ x 20¾″ and 16½″ x 20¾″ RWMA Size 2, 3 and 4 Secondary Pads Heavy Duty Applications Stacked Core from 250 KVA to 500 KVA	M-4

BULLETIN M-1

Machine Type Resistance Welding Transformers

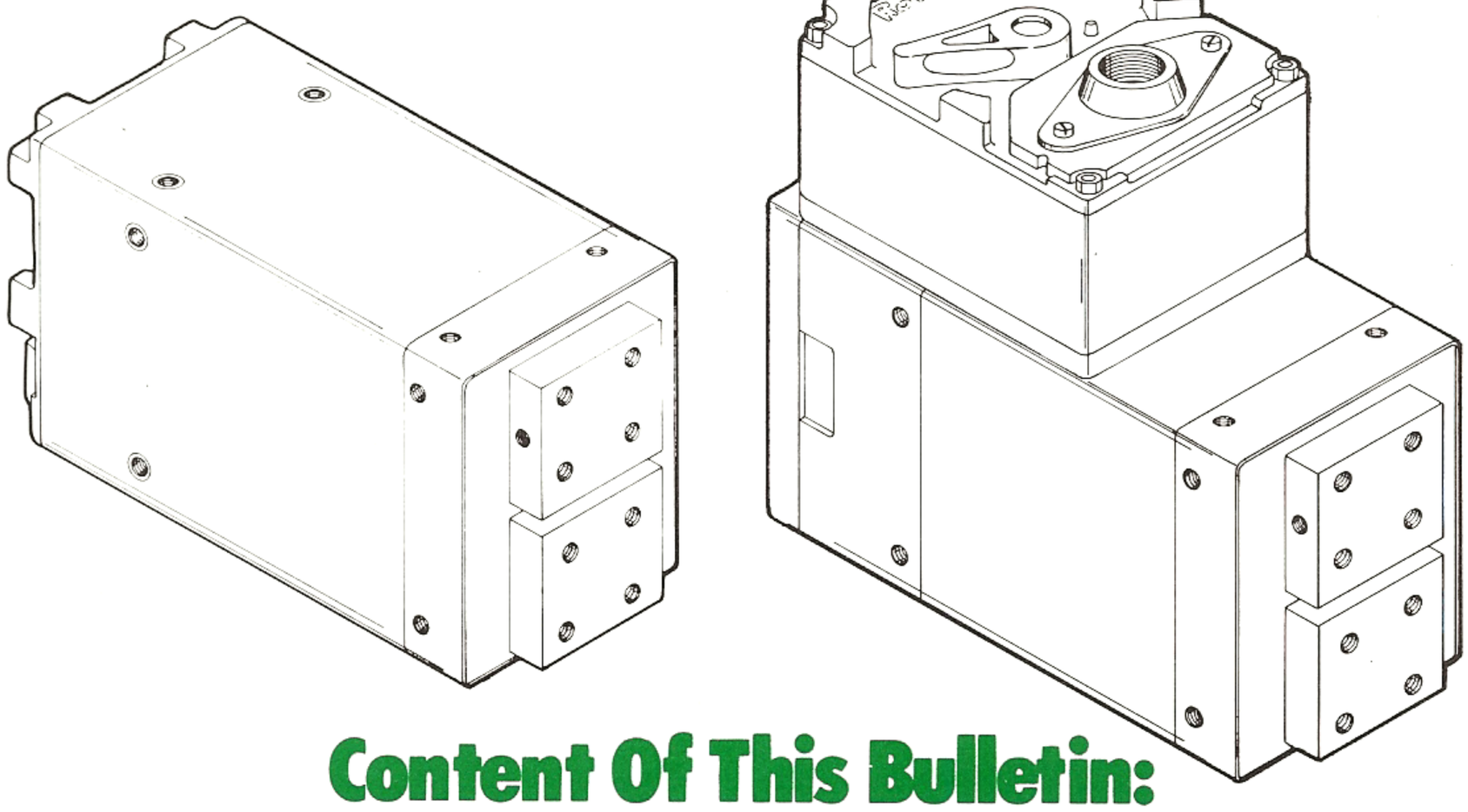

Content Of This Bulletin:

Machine Type Transformer
Frame Cross Section 7¼" x 9¼"

Wound Core 30 KVA to 50 KVA
Stacked Core 20 KVA to 50 KVA

Manufacturing Program

Fixture Type Transformers up to 200 KVA	Request "F" Series Bulletin
Portable Gun Type Transformers up to 200 KVA	Request "G" Series Bulletin
Machine Type Transformers up to 500 KVA	Request "M" Series Bulletin
Transgun/Robot Type Transformers	Request "T" Series Bulletin
Special Products	Request "S" Series Bulletin

RoMan Manufacturing Inc.
861 47th Street, S.W., Grand Rapids, MI 49509 (616) 530-8641

General Description:

- Machine Type Transformer
- Frame Cross Section 7¼" x 9¼"

Ordering Instructions:

- Order by model number shown
- Add "X" to model number if transformer is to be fully potted
- Specify tap switch position on 5-way mount models

WOUND CORE

KVA RATING	SECONDARY VOLTAGE	NO. OF TAPS	TAP SWITCH LOCATION	RWMA PAD SIZE	MODEL NUMBER		WEIGHT (LBS)	DWG. NO.	FRAME LETTER
					220V/60 Hz	440V/60 Hz			
30	2.5 to 4.8	5	End Mount	1	M22630A1BMW	M44630A1BMW	142 lbs.	R1308 Page 3	A
			5-Way Mount	1	M22630A1DMW	M44630A1DMW	147 lbs.	R1307 Page 4	
40	3.2 to 5.8	5	End Mount	1	M22640E1BMW	M44640E1BMW	158 lbs.	R1308 Page 3	E
			5-Way Mount	1	M22640E1DMW	M44640E1DMW	163 lbs.	R1307 Page 4	
50	3.5 to 6.9	5	End Mount	1	M22650B1BMW	M44650B1BMW	178 lbs.	R1308 Page 3	B
			5-Way Mount	1	M22650B1DMW	M44650B1DMW	183 lbs.	R1307 Page 4	

STACKED CORE

KVA RATING	SECONDARY VOLTAGE	NO. OF TAPS	TAP SWITCH LOCATION	RWMA PAD SIZE	MODEL NUMBER		WEIGHT (LBS)	DWG. NO.	FRAME LETTER
					220V/60 Hz	440V/60 Hz			
20	1.9 to 3.5	5	End Mount	1	M22620A1BML	M44620A1BML	148 lbs.	R1308 Page 3	A
			5-Way Mount	1	M22620A1DML	M44620A1DML	153 lbs.	R1307 Page 4	
35	2.7 to 5.2	5	End Mount	1	M22635B1BML	M44635B1BML	187 lbs.	R1308 Page 3	B
			5-Way Mount	1	M22635B1DML	M44635B1DML	192 lbs.	R1307 Page 4	
50	3.5 to 6.5	5	End Mount	1	M22650J1BML	M44650J1BML	230 lbs.	R1308 Page 3	J
			5-Way Mount	1	M22650J1DML	M44650J1DML	235 lbs.	R1307 Page 4	

Standard Features:

- Class "F" insulation
- Solderless lug connections for primary wiring
- Secondary pad sizes and hole spacings to RWMA standard
- Secondary end positively sealed against contamination

Optional Features:

- Voltages and frequencies other than shown available on request
- Thermostats
- Special secondary pad sizes available on request
- Primary disconnect plug

FRAME LETTER	DIM "A"	DIM "B"
A	15.21	8.00
E	16.59	9.12
B	17.96	11.00
J	19.96	12.75

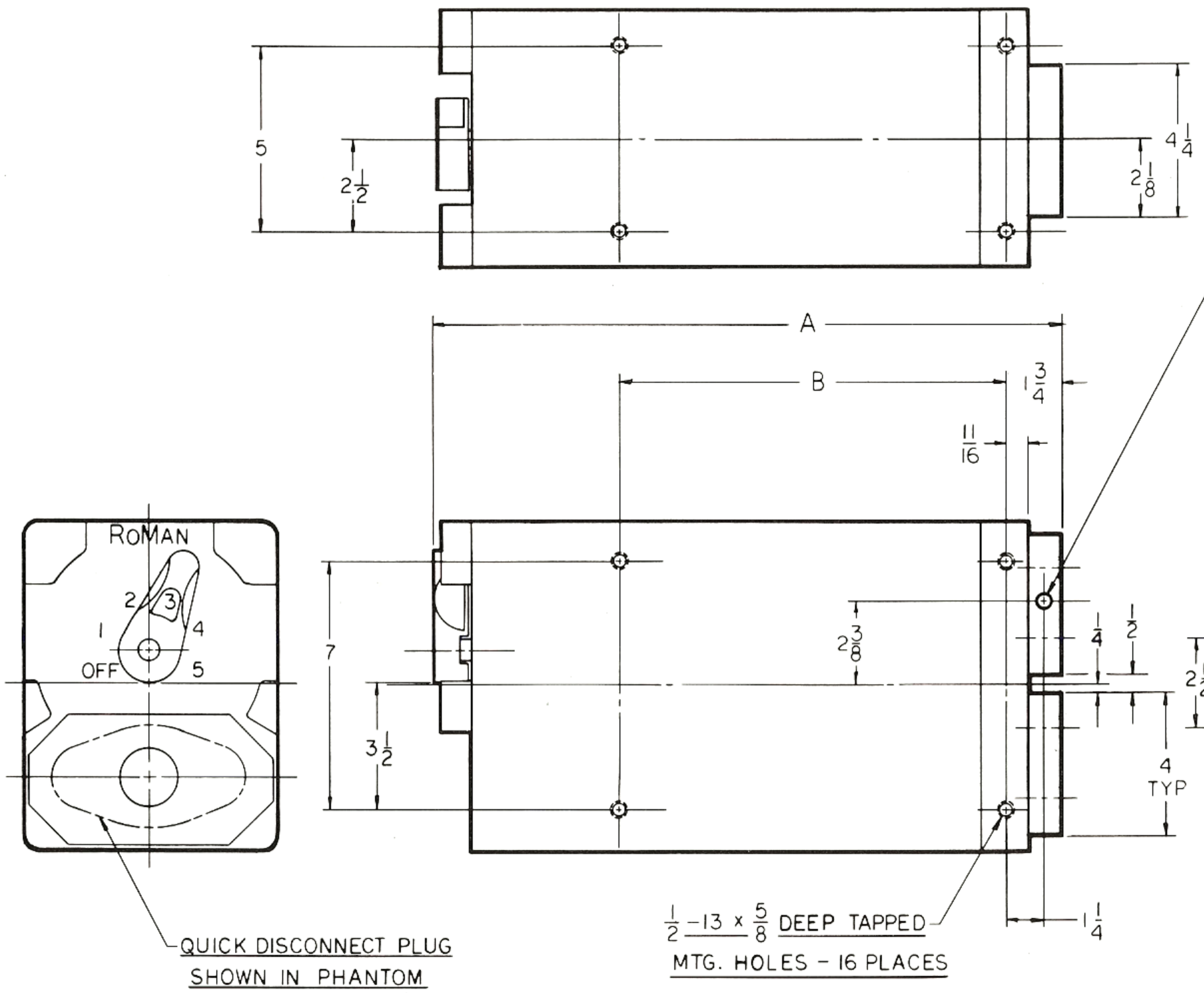

RoMan Manufacturing Inc.

MACHINE TYPE TRANSFORMER

TAP SWITCH: END MOUNT

FRAME CROSS SECTION: $7\frac{1}{4}$" x $9\frac{1}{4}$"

DRAWING NO. RI308

DATE: JAN. 1983

FRAME LETTER	DIM. "A"	DIM. "B"
A	16.81	8.00
E	17.93	9.12
B	19.81	11.00
J	21.50	12.75

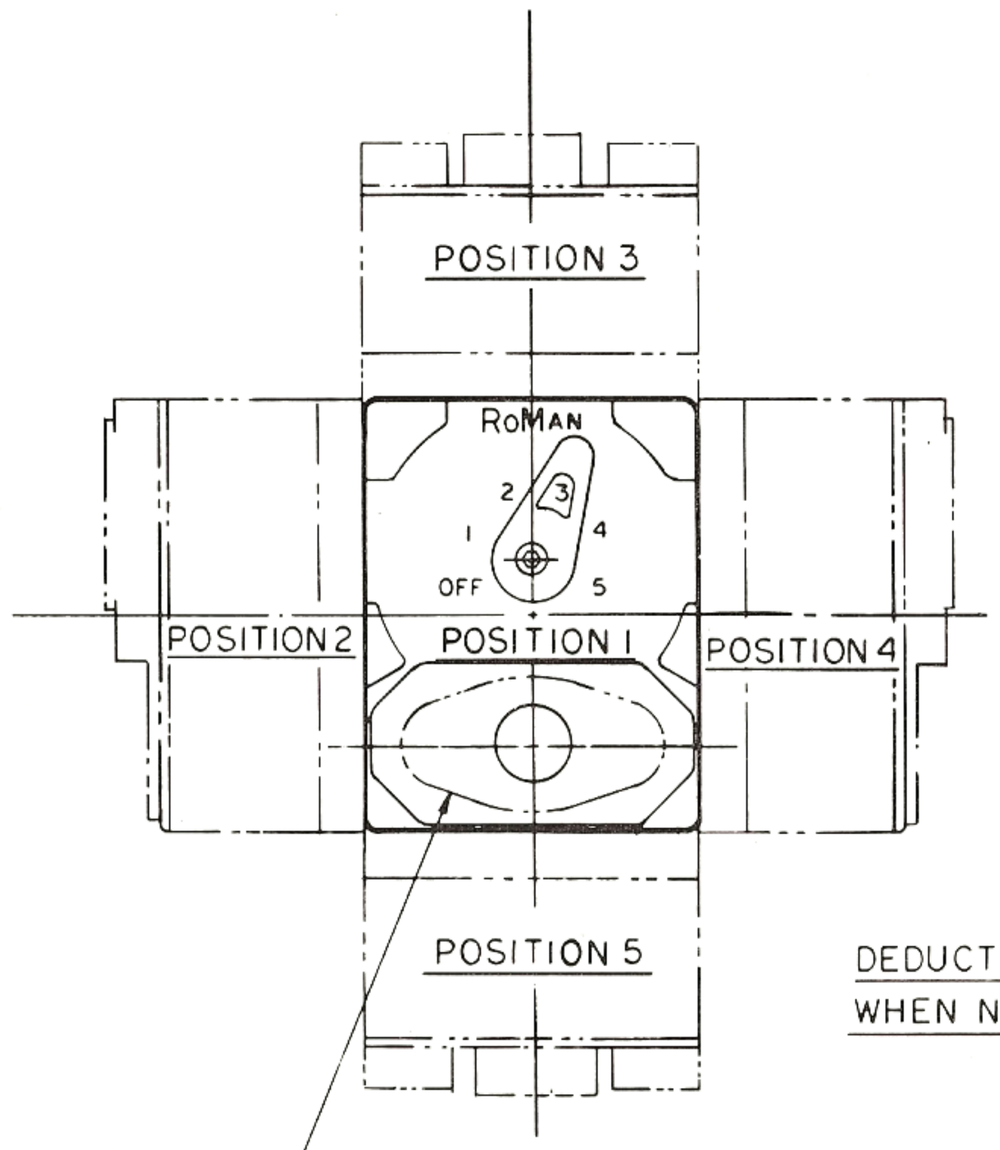

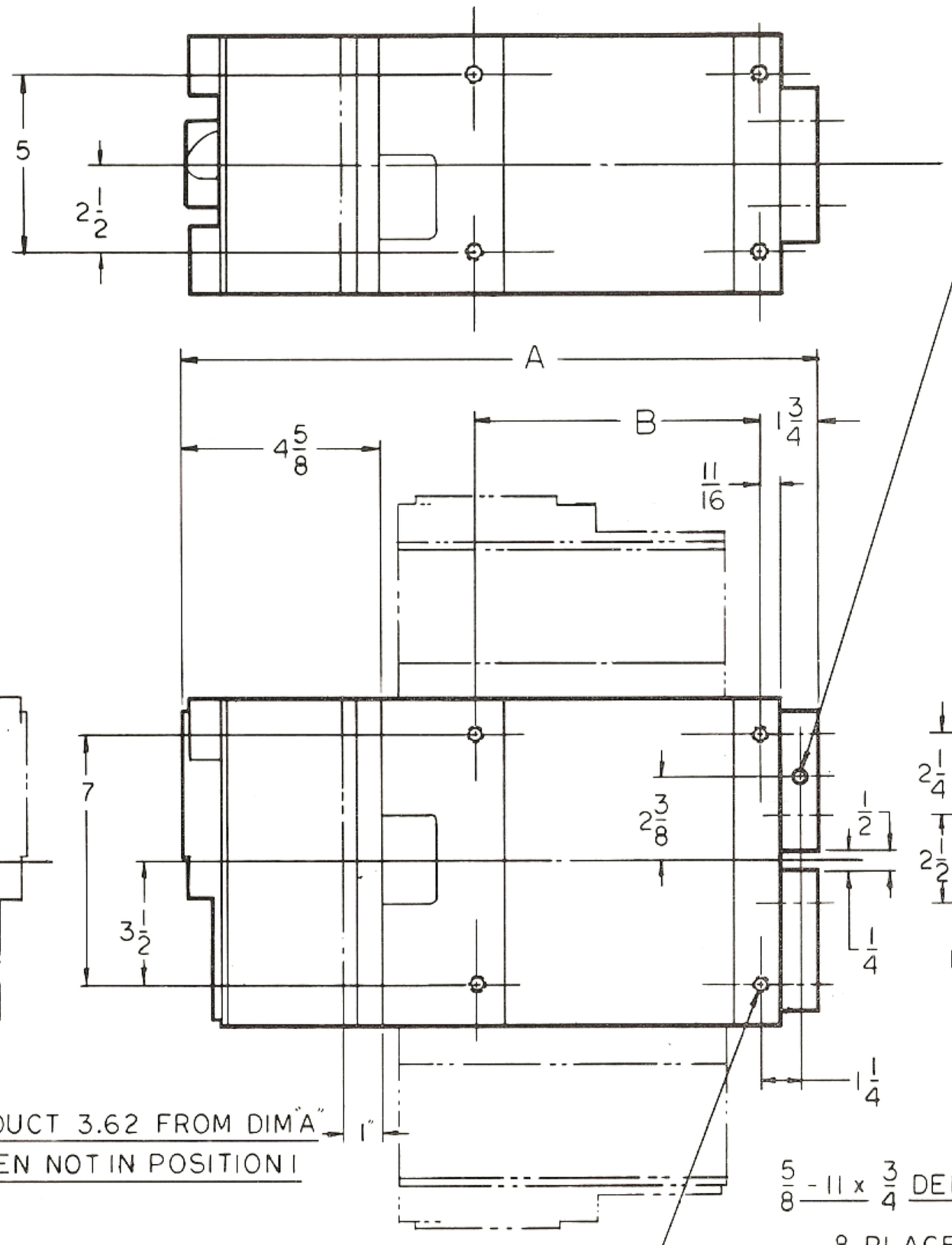

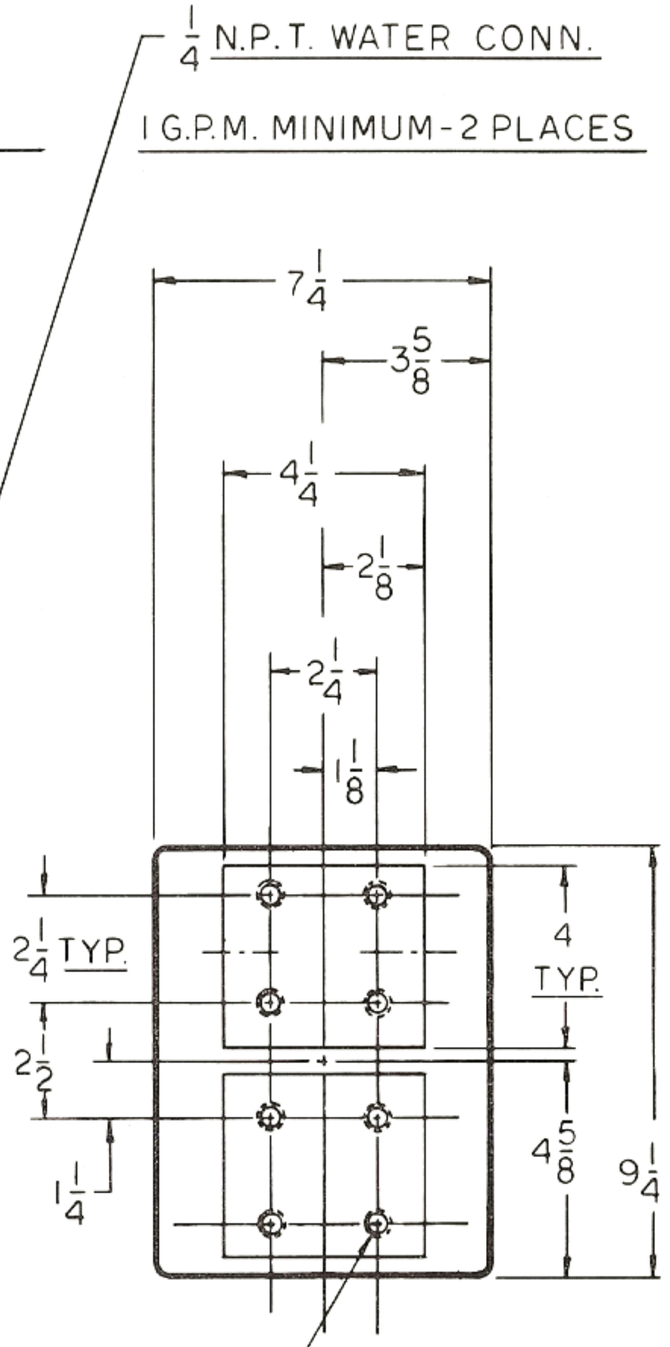

RoMan Manufacturing Inc.

MACHINE TYPE TRANSFORMER

TAP SWITCH: 5-WAY MOUNT

FRAME CROSS SECTION: 7 1/4" x 9 1/4"

DRAWING NO. R1307

DATE: JAN., 1983

BULLETIN M-2

Machine Type Resistance Welding Transformers

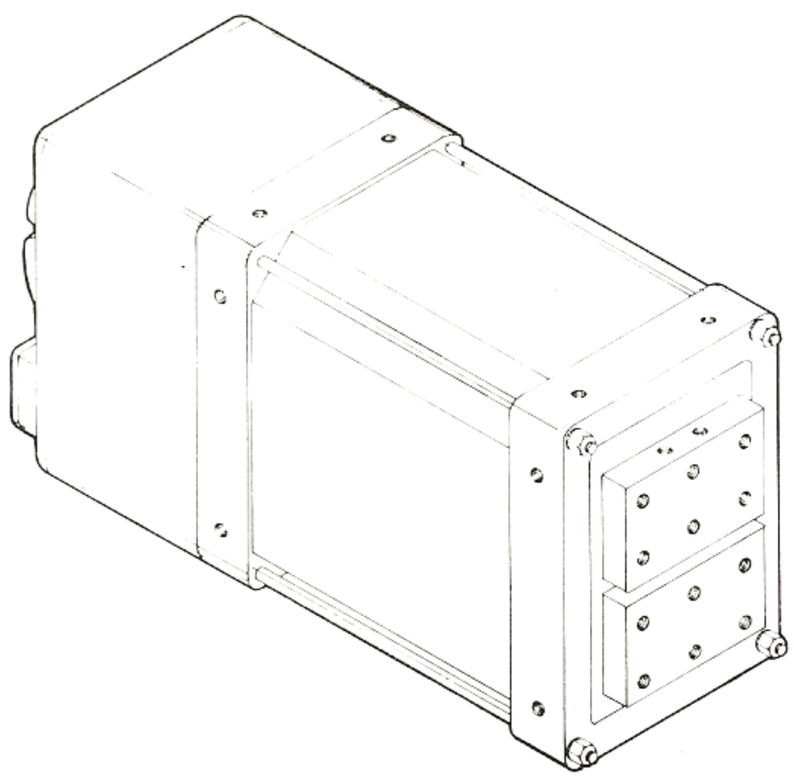

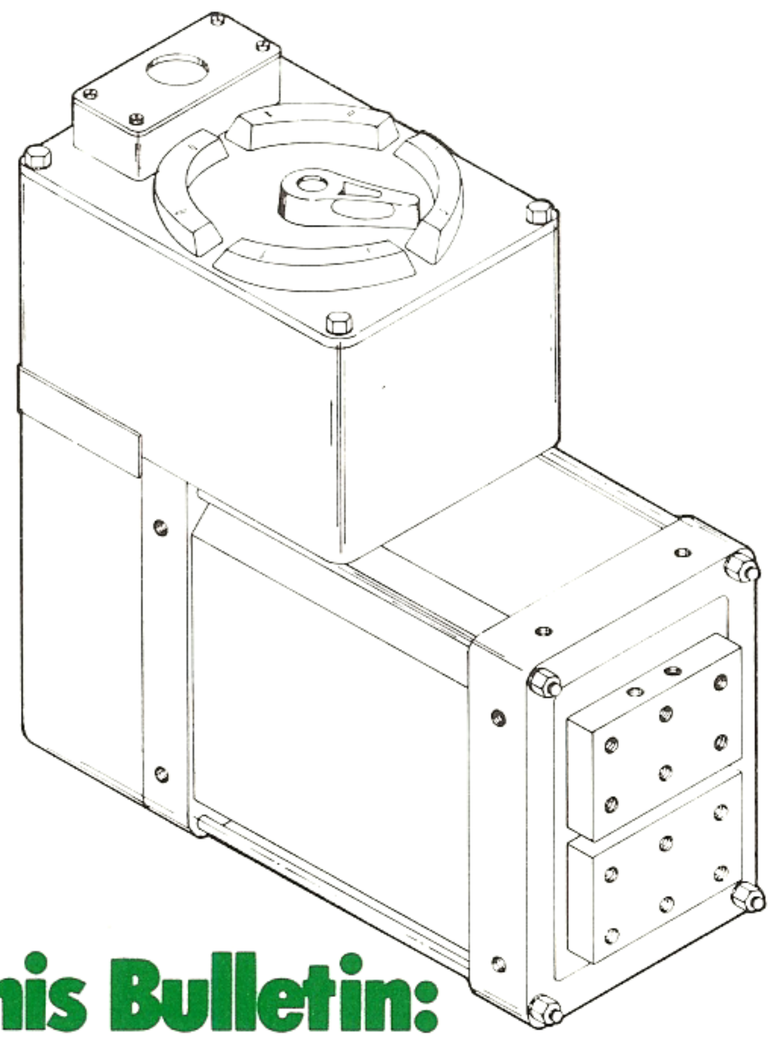

Content Of This Bulletin:

Machine Type Transformer
Frame Cross Section 9½" x 13⅜"

Stacked Core
50 KVA to 100 KVA

Manufacturing Program

Fixture Type Transformers up to 200 KVA	Request "F" Series Bulletin
Portable Gun Type Transformers up to 200 KVA	Request "G" Series Bulletin
Machine Type Transformers up to 500 KVA	Request "M" Series Bulletin
Transgun/Robot Type Transformers	Request "T" Series Bulletin
Special Products	Request "S" Series Bulletin

RoMan Manufacturing Inc.
861 47th Street, S.W., Grand Rapids, MI 49509 (616) 530-8641

General Description:

- Machine Type Transformer
- Stacked Core
- Frame Cross Section 9½" x 13⅜"

Ordering Instructions:

- Order by model number shown
- Add "X" to model number if transformer is to be fully potted
- Specify "primary conduit opening" or "primary cable clamp block" ("primary conduit opening" furnished standard)

KVA RATING	SECONDARY VOLTAGE	NO. OF TAPS	TAP SWITCH LOCATION	RWMA PAD SIZE	MODEL NUMBER 220V/60 Hz	MODEL NUMBER 440V/60 Hz	WEIGHT (LBS)	DWG. NO.	FRAME LETTER
50	4.0 to 7.9	6	End Mount	1 2	M22650NB1BML M22650NB1BNL	M44650NB1BML M44650NB1BNL	319 lbs. 322 lbs.	R1206 Page 3	NB
			Side Mount	1 2	M22650NB1FML M22650NB1FNL	M44650NB1FML M44650NB1FNL	339 lbs. 342 lbs.	R1306 Page 4	
50	3.6 to 10.0	8	End Mount	1 2	M22650NL1BML M22650NL1BNL	M44650NL1BML M44650NL1BNL	369 lbs. 372 lbs.	R1206 Page 3	NL
			Side Mount	1 2	M22650NL1FML M22650NL1FNL	M44650NL1FML M44650NL1FNL	389 lbs. 392 lbs.	R1306 Page 4	
75	5.7 to 10.0	8	End Mount	1 2	M22675NL1BML M22675NL1BNL	M44675NL1BML M44675NL1BNL	369 lbs. 372 lbs.	R1206 Page 3	NL
			Side Mount	1 2	M22675NL1FML M22675NL1FNL	M44675NL1FML M44675NL1FNL	389 lbs. 392 lbs.	R1306 Page 4	
100	6.8 to 10.0	6	End Mount	1 2	M226100NL1BML M226100NL1BNL	M446100NL1BML M446100NL1BNL	369 lbs. 372 lbs.	R1206 Page 3	NL
			Side Mount	1 2	M226100NL1FML M226100NL1FNL	M446100NL1FML M446100NL1FNL	389 lbs. 392 lbs.	R1306 Page 4	

Standard Features:

- Class "F" insulation
- Solderless lug connections for primary wiring
- Secondary pad sizes and hole spacings to RWMA standards
- Secondary end positively sealed against contamination

Optional Features:

- Voltages and frequencies other than shown available on request
- Thermostats
- Special secondary pad sizes available on request
- Remote tap switch

MACHINE TYPE TRANSFORMER

TAP SWITCH : END MOUNT

FRAME CROSS SECTION: $9\frac{1}{2}'' \times 13\frac{3}{8}''$

DRAWING NO. R1206

DATE : DEC., 1982

RoMan Manufacturing Inc.

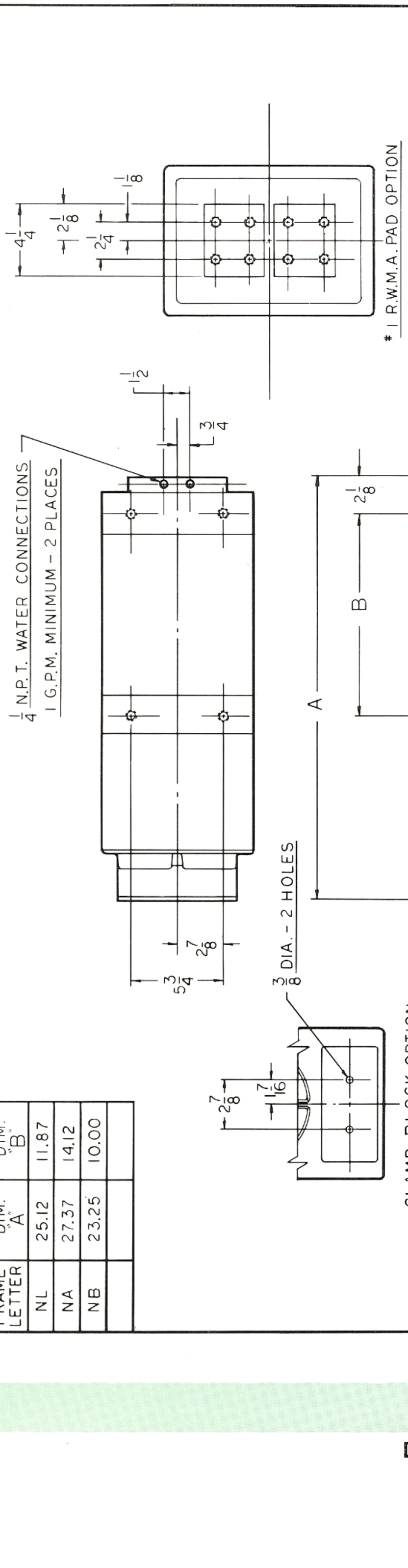

FRAME LETTER	DIM. "A"	DIM. "B"
NL	25.12	11.87
NA	27.37	14.12
NB	23.25	10.00

FRAME LETTER	DIM. "A"	DIM. "B"
NL	18.87	11.87
NA	21.12	14.12
NB	17.00	10.00

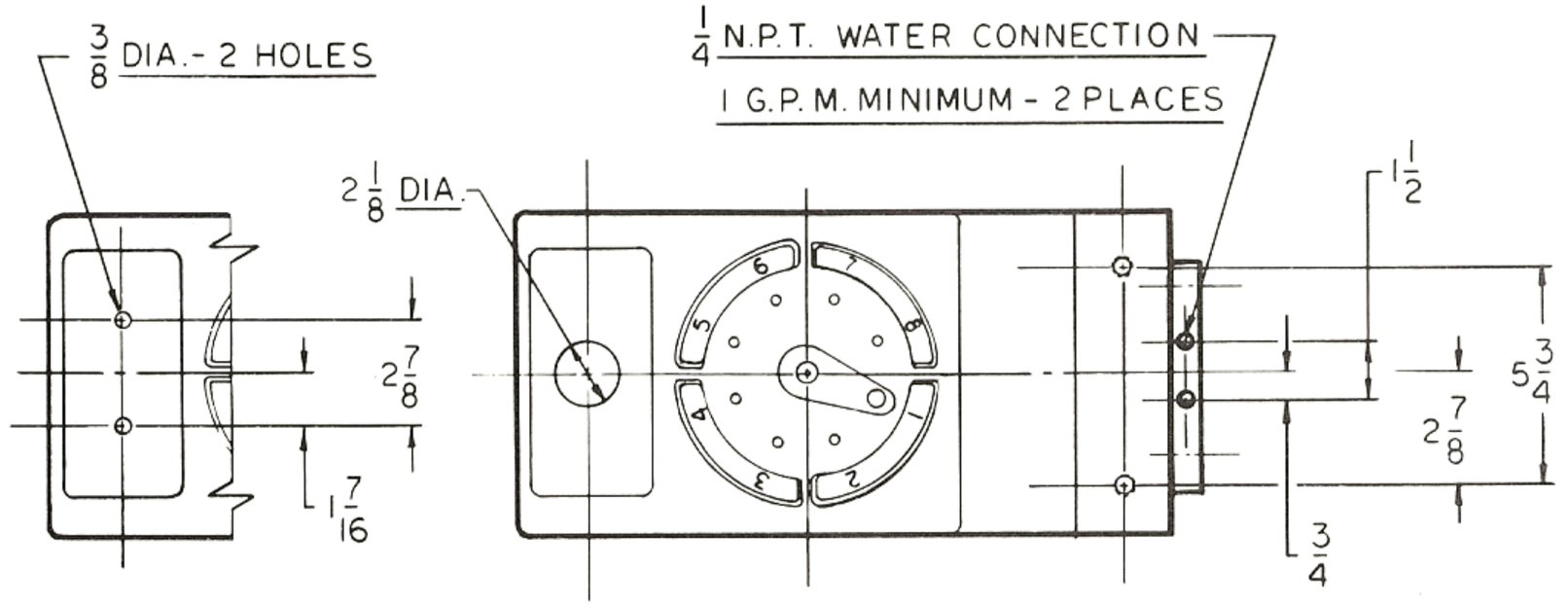

CLAMP BLOCK OPTION

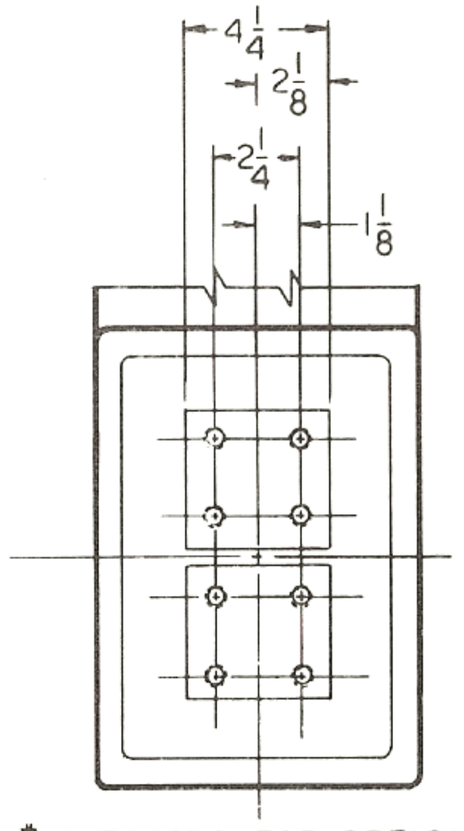

* 1 R.W.M.A. PAD OPTION

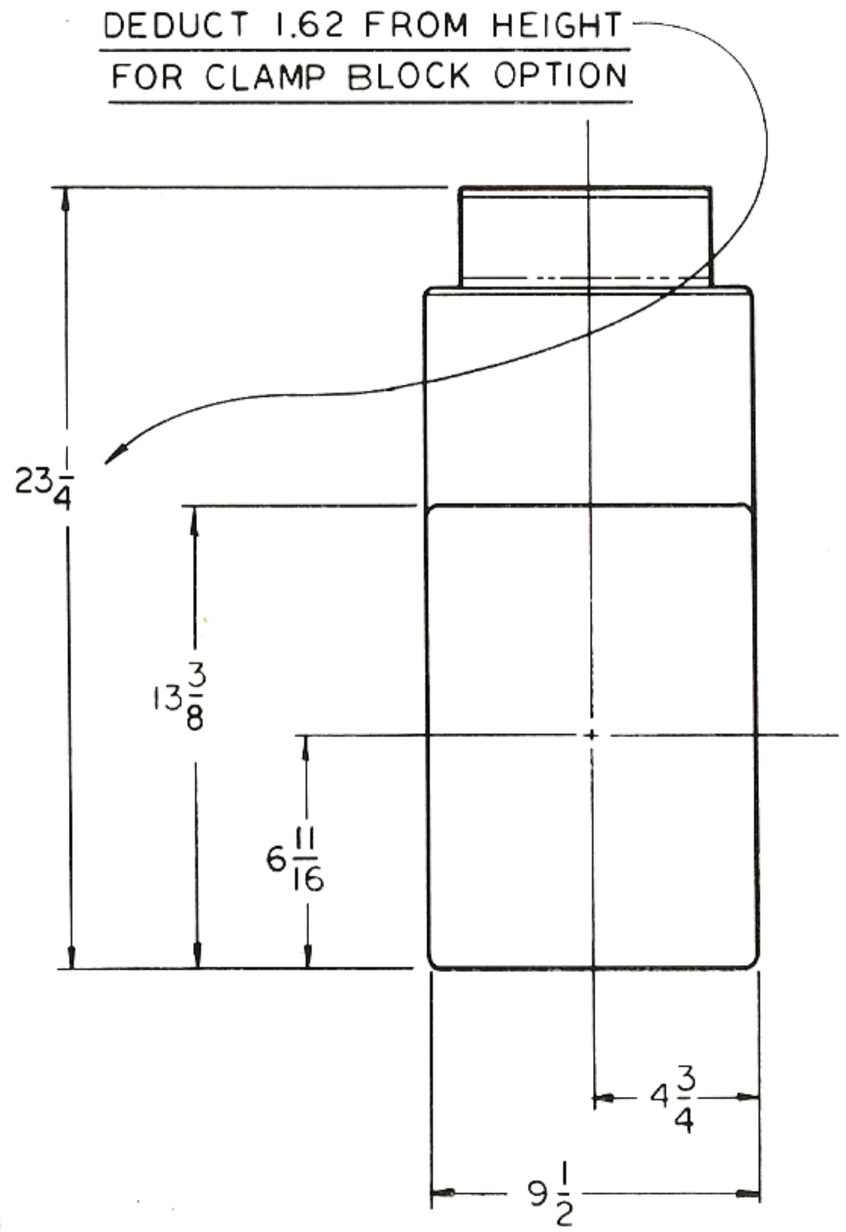

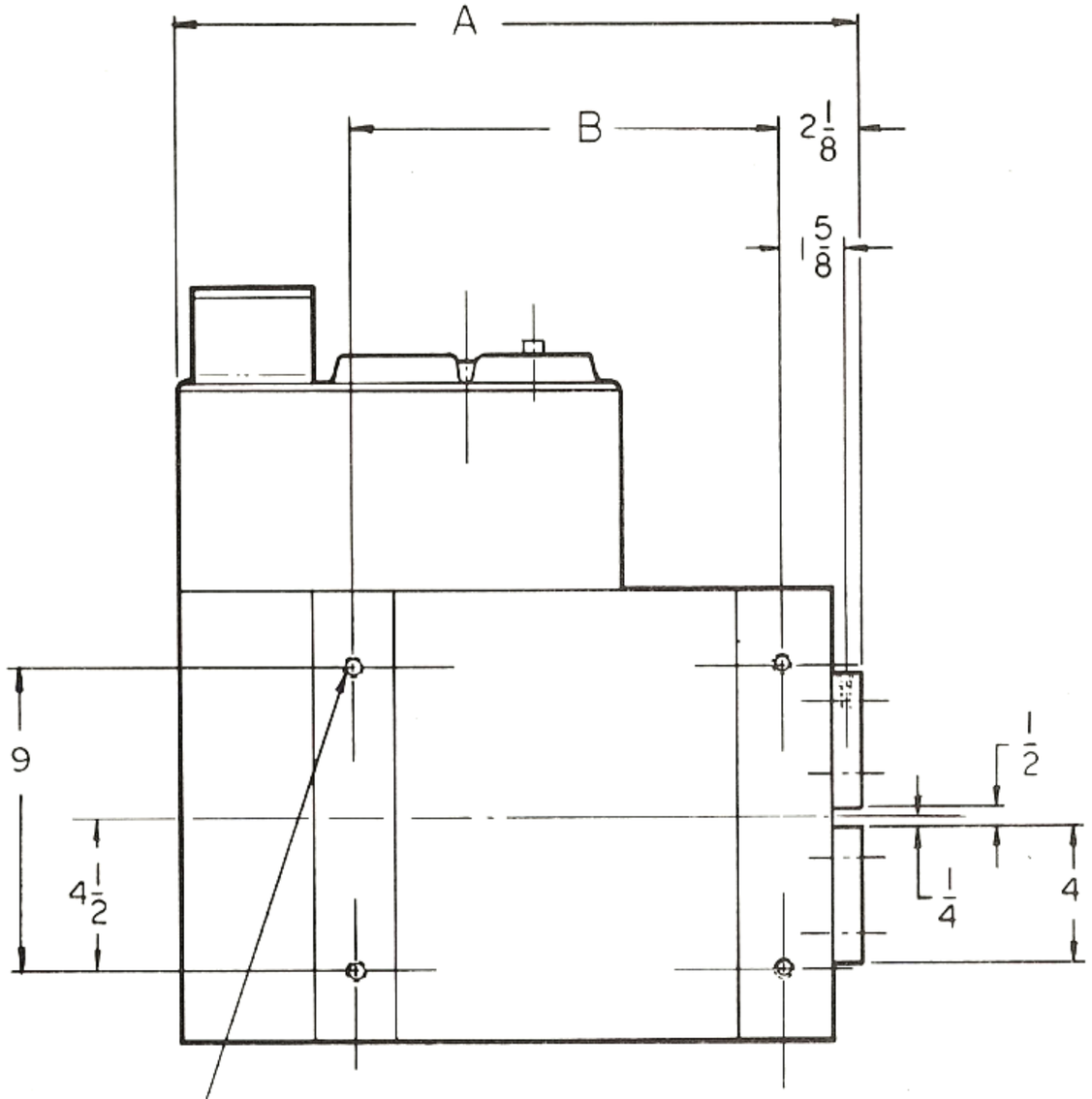

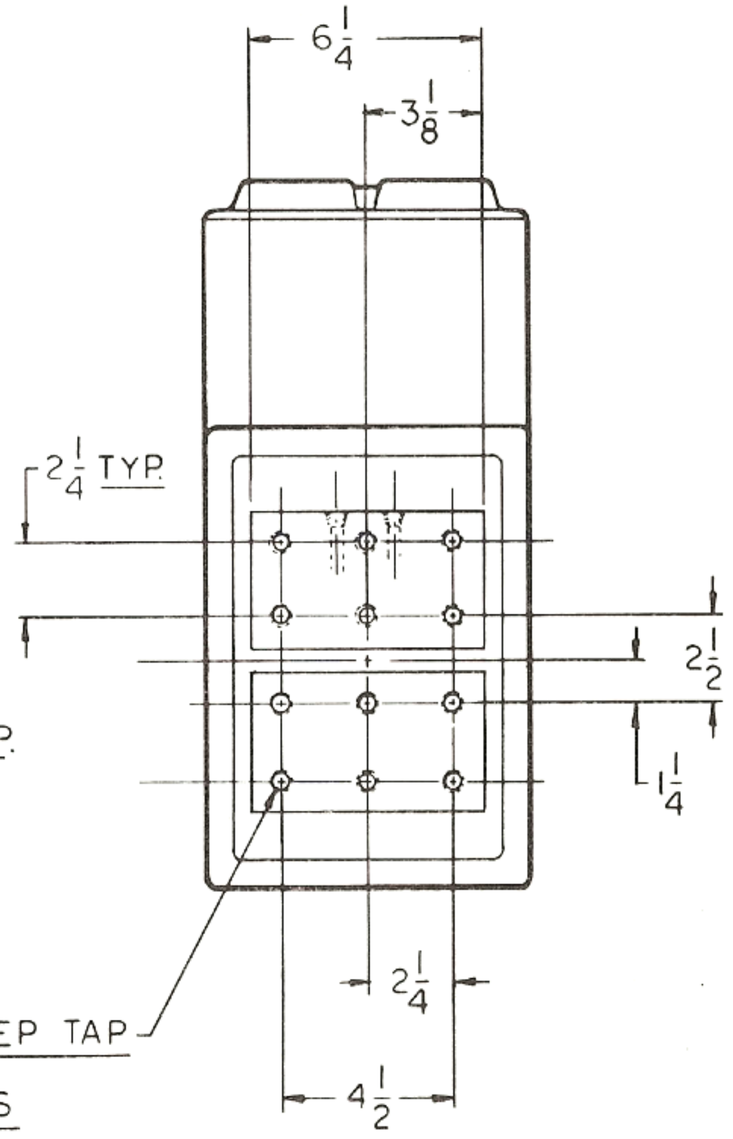

RoMan Manufacturing Inc.

MACHINE TYPE TRANSFORMER

TAP SWITCH: SIDE MOUNT

FRAME CROSS SECTION: 9 1/2" x 13 3/8"

DRAWING NO. R1306

DATE JAN. 1983

BULLETIN
M-2.1

Machine Type Resistance Welding Transformers

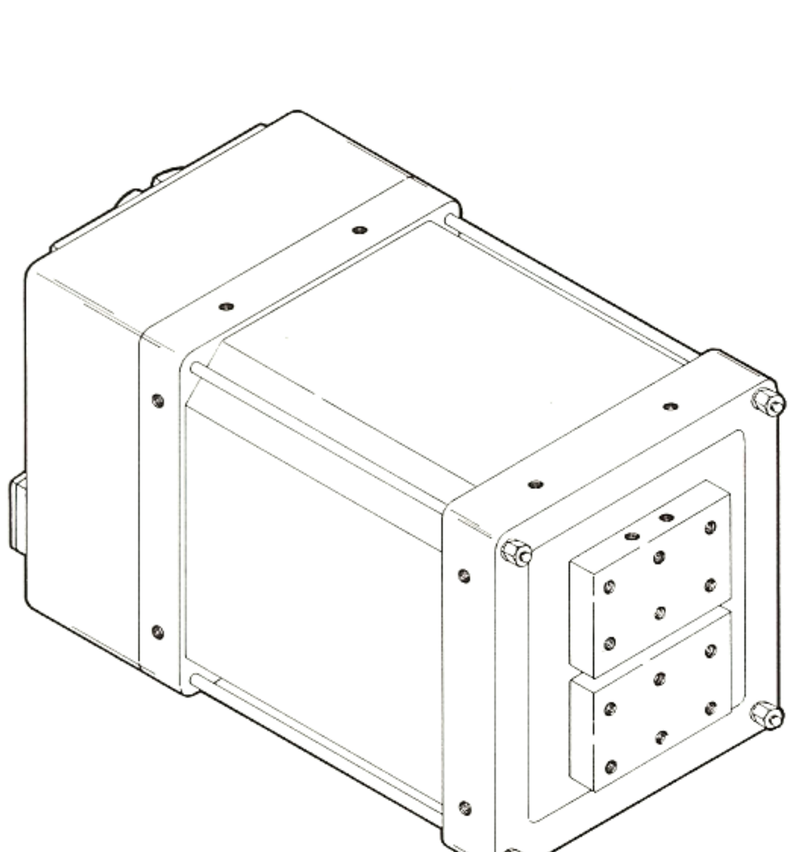

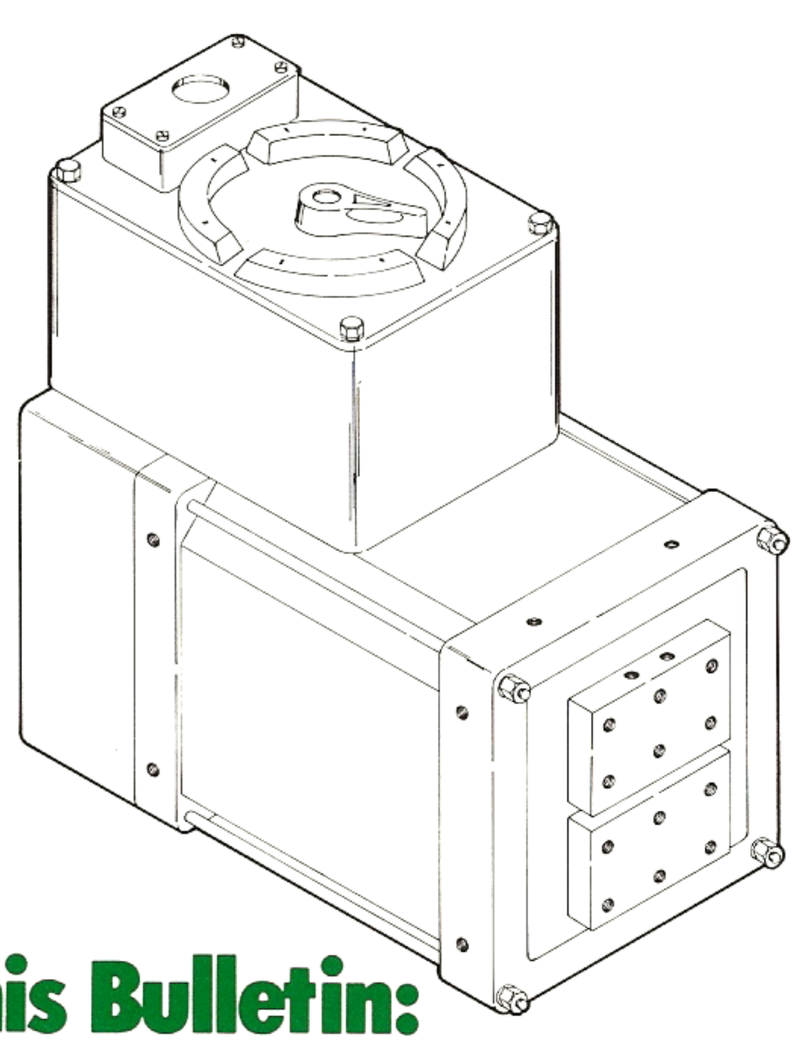

Content Of This Bulletin:

Machine Type Transformer
Frame Cross Section 10¾'' x 13⅜''

Stacked Core
100 KVA to 125 KVA

Manufacturing Program

Fixture Type Transformers up to 200 KVA	Request ''F'' Series Bulletin
Portable Gun Type Transformers up to 200 KVA	Request ''G'' Series Bulletin
Machine Type Transformers up to 500 KVA	Request ''M'' Series Bulletin
Transgun/Robot Type Transformers	Request ''T'' Series Bulletin
Special Products	Request ''S'' Series Bulletin

RoMan Manufacturing Inc.

861 47th Street, S.W., Grand Rapids, MI 49509 Phone (616) 530-8641 FAX (616) 530-8953

General Description:

- Machine Type Transformer
- Stacked Core
- Frame Cross Section 10¾" x 13⅜"

Ordering Instructions:

- Order by model number shown
- Add "X" to model number if transformer is to be fully potted
- Specify "primary conduit opening" or "primary cable clamp block" ("primary conduit opening" furnished standard)

KVA RATING	SECONDARY VOLTAGE	NO. OF TAPS	TAP SWITCH LOCATION	RWMA PAD SIZE	MODEL NUMBER		WEIGHT (LBS)	DWG. NO.	FRAME LETTER
					220V/60 Hz	440V/60 Hz			
100	5.5 to 10.0	8	End Mount	1 2 3	M226100ML1BML M226100ML1BNL M226100ML1BOL	M446100ML1BML M446100ML1BNL M446100ML1BOL	420 lbs. 423 lbs. 427 lbs.	R1471 Page 3	ML
			Side Mount	1 2 3	M226100ML1FML M226100ML1FNL M226100ML1FOL	M446100ML1FML M446100ML1FNL M446100ML1FOL	440 lbs. 443 lbs. 447 lbs.	R1472 Page 4	
125	6.6 to 12.2	8	End Mount	1 2 3	M226125MA1BML M226125MA1BNL M226125MA1BOL	M446125MA1BML M446125MA1BNL M446125MA1BOL	490 lbs. 493 lbs. 501 lbs.	R1471 Page 3	MA
			Side Mount	1 2 3	M226125MA1FML M226125MA1FNL M226125MA1FOL	M446125MA1FML M446125MA1FNL M446125MA1FOL	510 lbs. 513 lbs. 517 lbs.	R1472 Page 4	

Standard Features:

- Class "F" insulation
- Solderless lug connections for primary wiring
- Secondary pad sizes and hole spacings to RWMA standards
- Secondary end positively sealed against contamination

Optional Features:

- Voltages and frequencies other than shown available on request
- Thermostats
- Special secondary pad sizes available on request
- Remote tap switch

FRAME LETTER	DIM "A"	DIM "B"
ML	25.12	11.87
MA	27.37	14.12

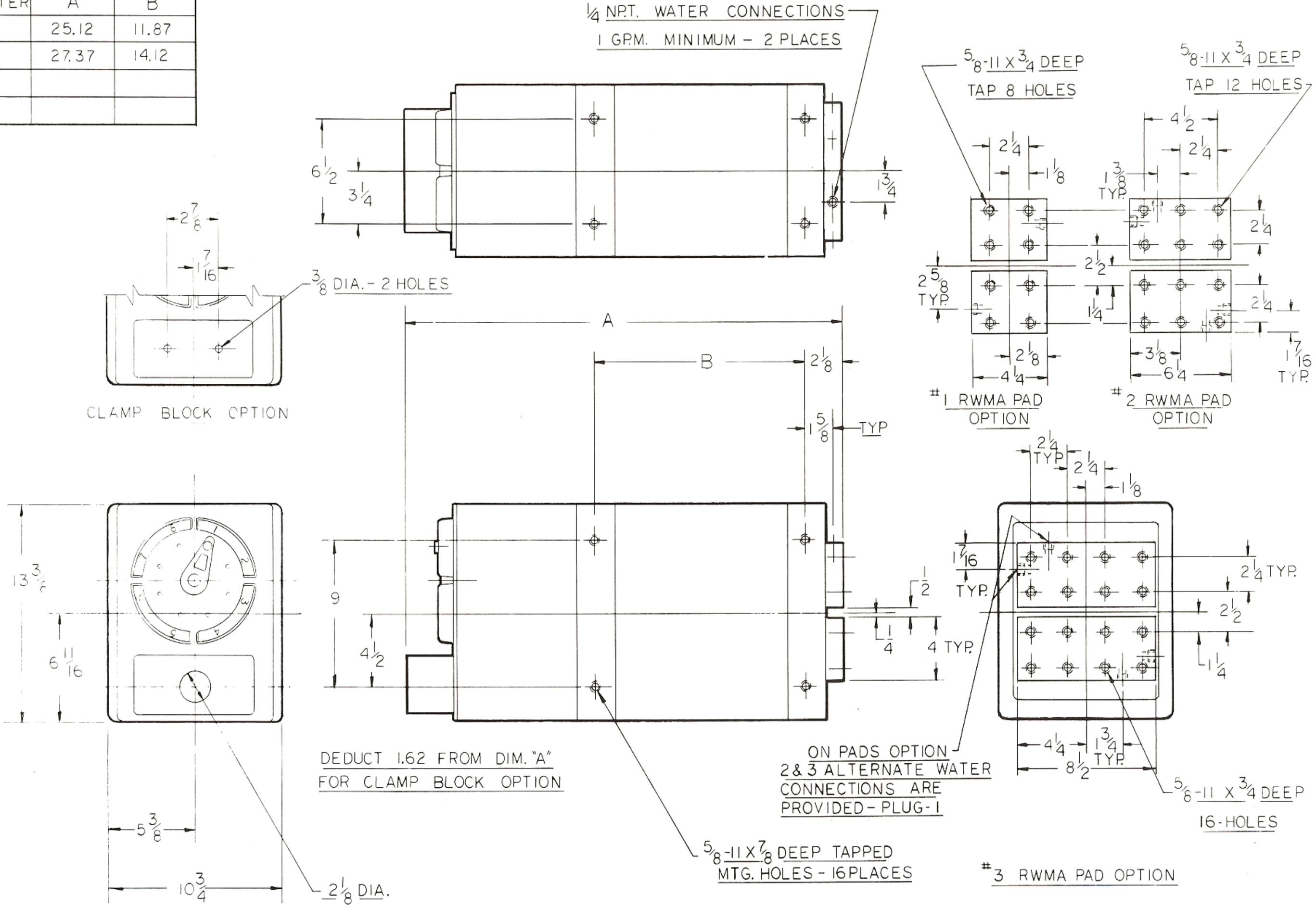

RoMan Manufacturing Inc.

MACHINE TYPE TRANSFORMER

TAP SWITCH : END MOUNT

FRAME CROSS SECTION : 10 3/4" X 13 3/8"

DRAWING NO. R-1471

DATE : AUG. 14 , 1986

REV. A
3-14-88

MACHINE TYPE TRANSFORMER

TAP SWITCH : SIDE MOUNT

FRAME CROSS SECTION : $10\frac{3}{4}$" X $13\frac{3}{8}$"

DRAWING NO. R-1472

DATE : AUG.14, 1986

REV. A
3-14-88

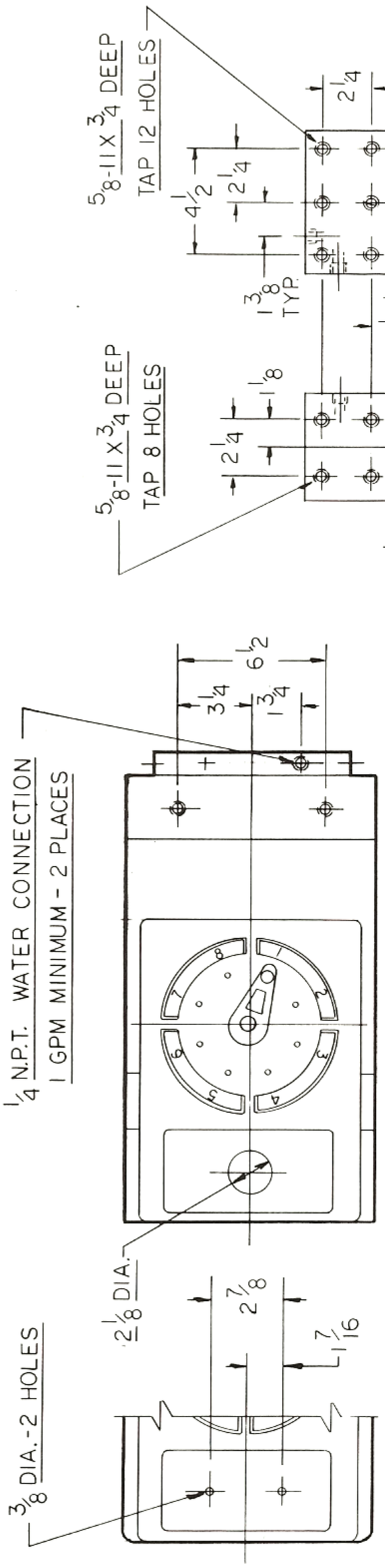

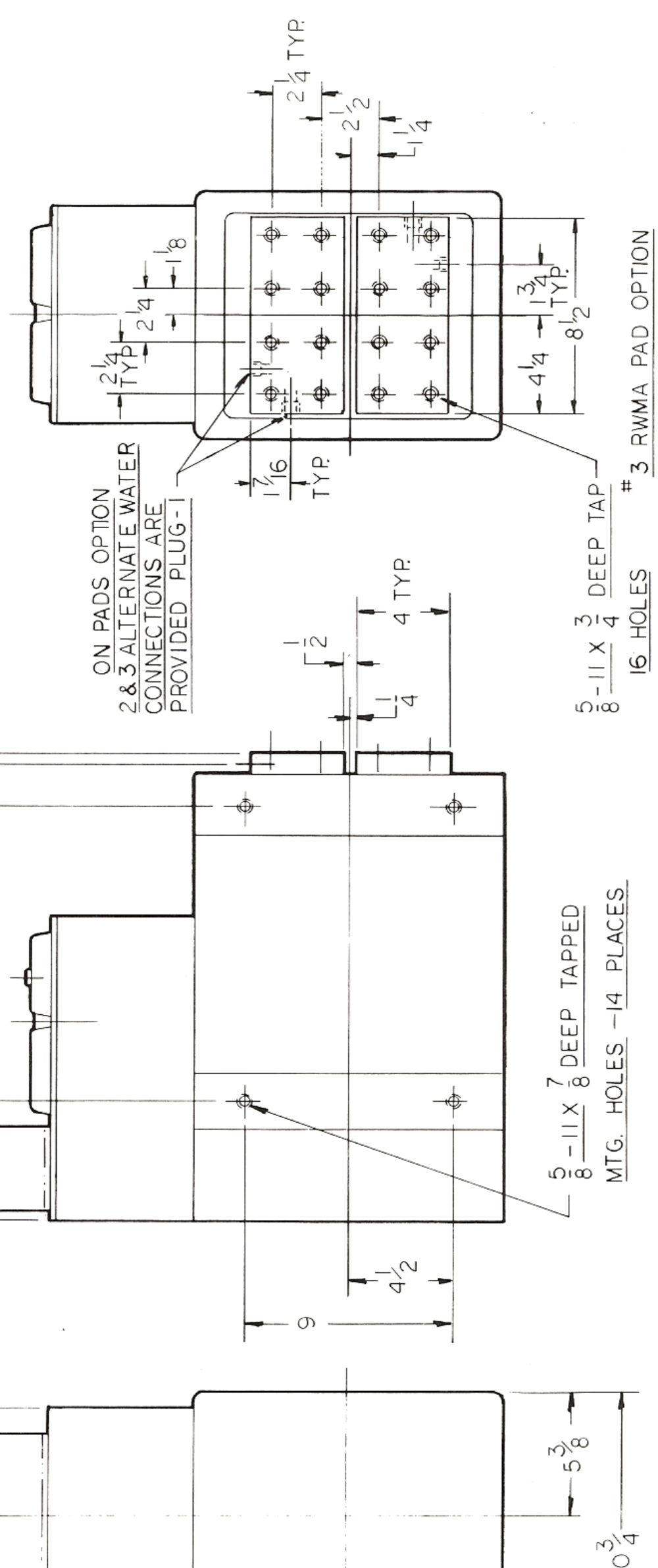

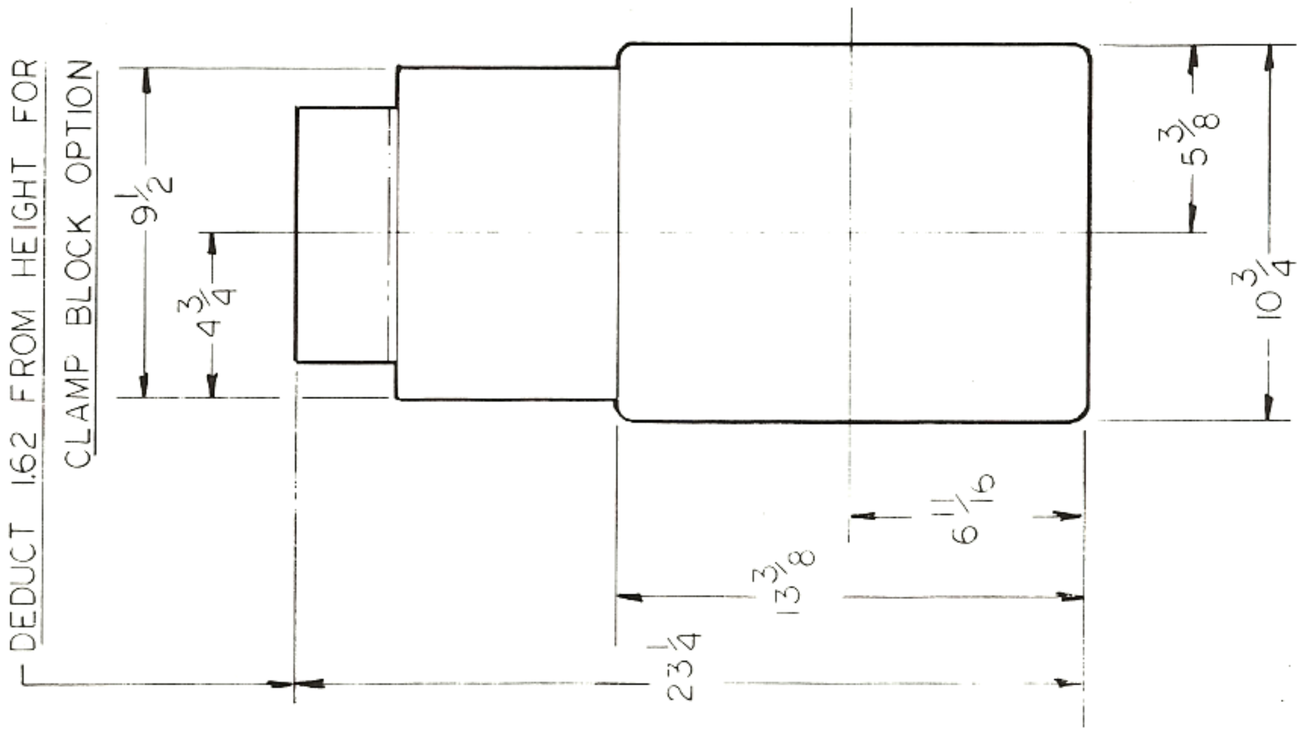

FRAME LETTER	DIM. "A"	DIM. "B"
ML	18.87	11.87
MA	21.12	14.12

BULLETIN M-3

Machine Type Resistance Welding Transformers

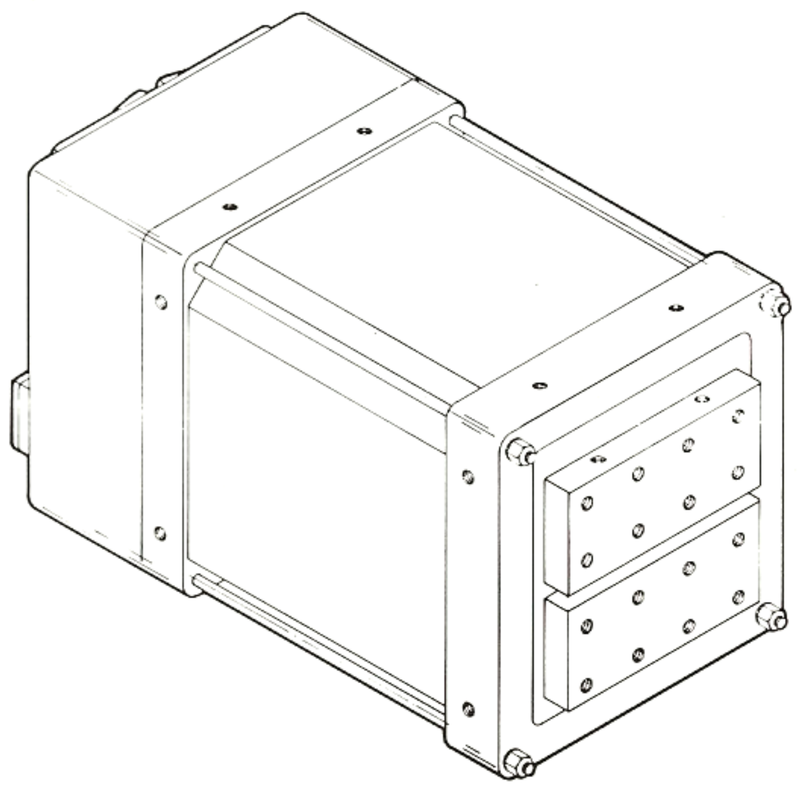

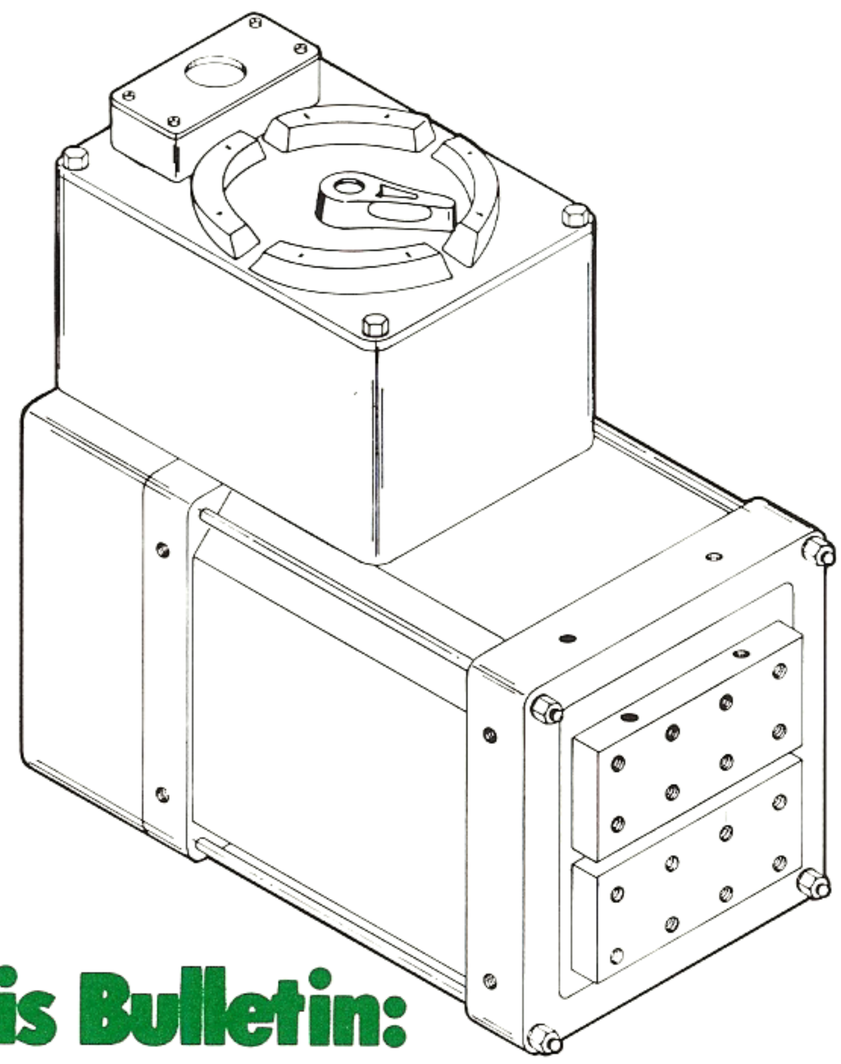

Content Of This Bulletin:

Machine Type Transformer
Frame Cross Section 12½" x 13⅜"

Stacked Core
150 KVA to 200 KVA

Manufacturing Program

Fixture Type Transformers up to 200 KVA	Request "F" Series Bulletin
Portable Gun Type Transformers up to 200 KVA	Request "G" Series Bulletin
Machine Type Transformers up to 500 KVA	Request "M" Series Bulletin
Transgun/Robot Type Transformers	Request "T" Series Bulletin
Special Products	Request "S" Series Bulletin

RoMan Manufacturing Inc.

861 47th Street, S.W., Grand Rapids, MI 49509 (616) 530-8641

General Description:

- Machine Type Transformer
- Stacked Core
- Frame Cross Section 12½" x 13⅜"

Ordering Instructions:

- Order by model number shown
- Add "X" to model number if transformer is to be fully potted
- Specify "primary conduit opening" or "primary cable clamp block" ("primary conduit opening" furnished standard)

KVA RATING	SECONDARY VOLTAGE	NO. OF TAPS	TAP SWITCH LOCATION	RWMA PAD SIZE	MODEL NUMBER		WEIGHT (LBS)	DWG. NO.	FRAME LETTER
					220V/60 Hz	440V/60 Hz			
150	6.4 to 11.0	8	End Mount	2 3	M226150PL1BNL M226150PL1BOL	M446150PL1BNL M446150PL1BOL	546 lbs. 551 lbs.	R1093 Page 3	PL
			Side Mount	2 3	M226150PL1FNL M226150PL1FOL	M446150PL1FNL M446150PL1FOL	556 lbs. 571 lbs.	R1305 Page 4	
200	7.6 to 11.3	8	End Mount	2 3		M446200PL1BNL M446200PL1BOL	546 lbs. 551 lbs.	R1093 Page 3	PL
			Side Mount	2 3		M446200PL1FNL M446200PL1FOL	566 lbs. 571 lbs.	R1305 Page 4	
200	7.8 to 12.9	8	End Mount	2 3		M446200PA1BNL M446200PA1BOL	650 lbs. 655 lbs.	R1093 Page 3	PA
			Side Mount	2 3		M446200PA1FNL M446200PA1FOL	670 lbs. 675 lbs.	R1305 Page 4	

Standard Features:

- Class "F" insulation
- Solderless lug connections for primary wiring
- Secondary pad sizes and hole spacings to RWMA standards
- Secondary end positively sealed against contamination

Optional Features:

- Voltages and frequencies other than shown available on request
- Thermostats
- Special secondary pad sizes available on request
- Remote tap switch

FRAME LETTER	DIM. "A"	DIM. "B"
PL	26.12	12.87
PA	28.38	15.12

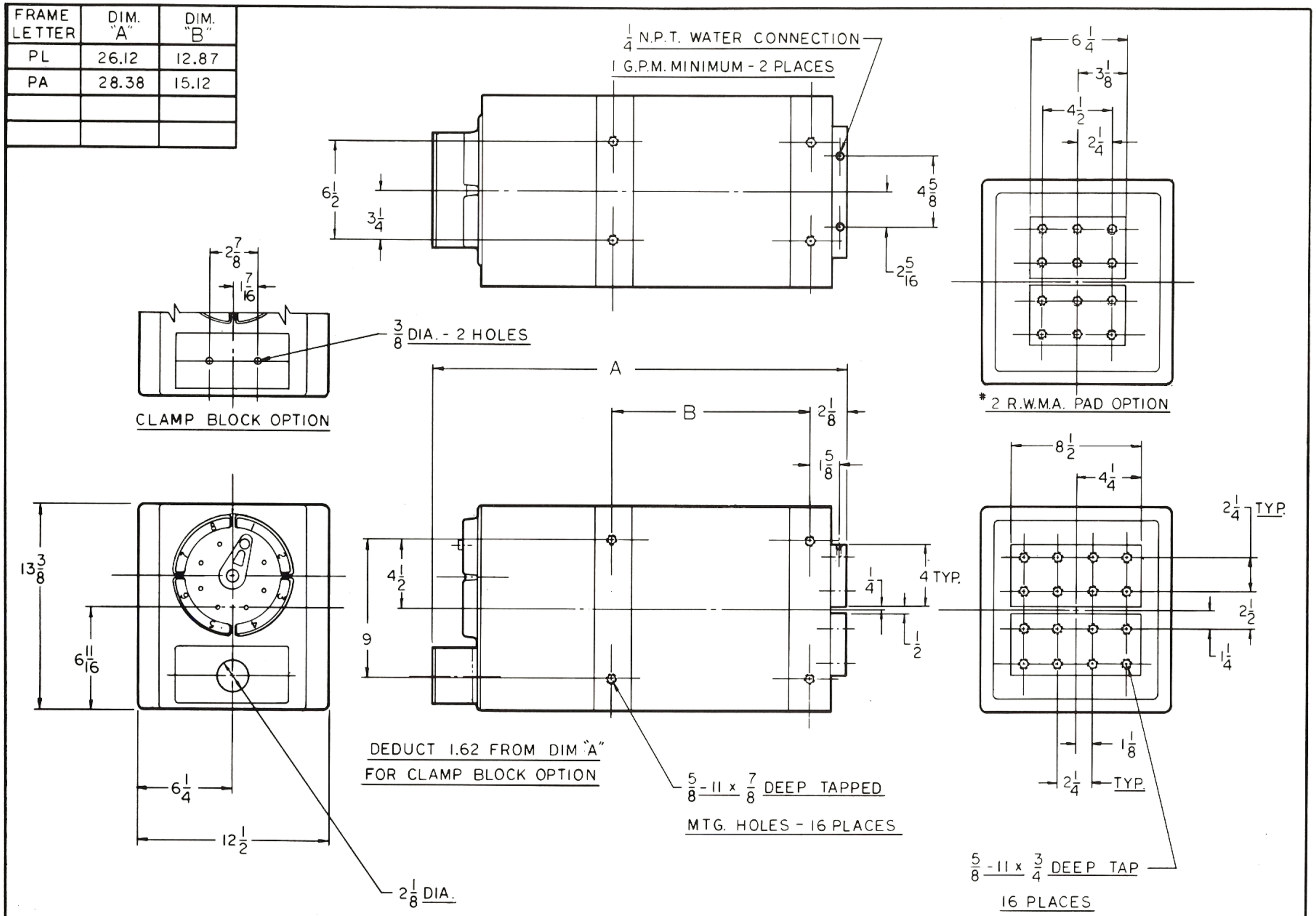

RoMan Manufacturing Inc.

MACHINE TYPE TRANSFORMER

TAP SWITCH: END MOUNT

FRAME CROSS SECTION: 12 1/2" x 13 3/8"

DRAWING NO. R1093

DATE: DEC., 1982

FRAME LETTER	DIM. "A"	DIM. "B"
PL	19.87	12.87
PA	22.12	15.12

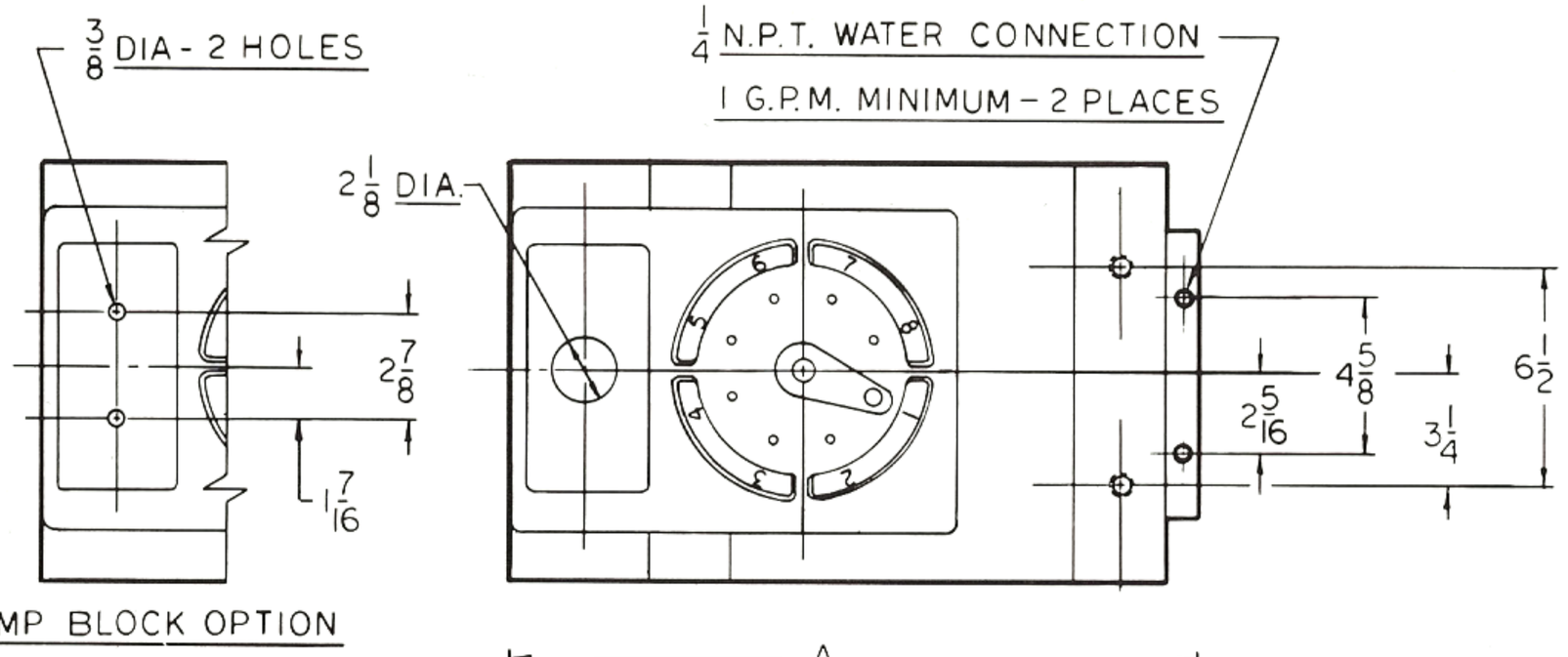

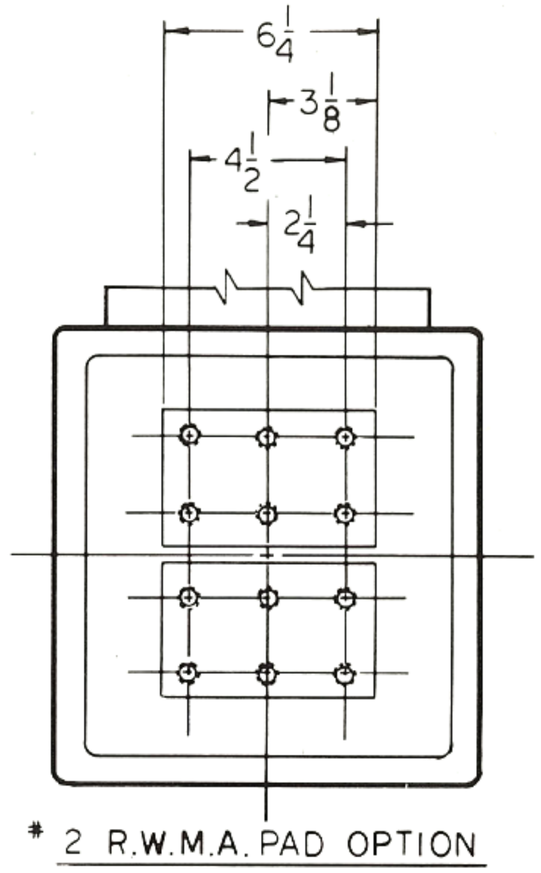

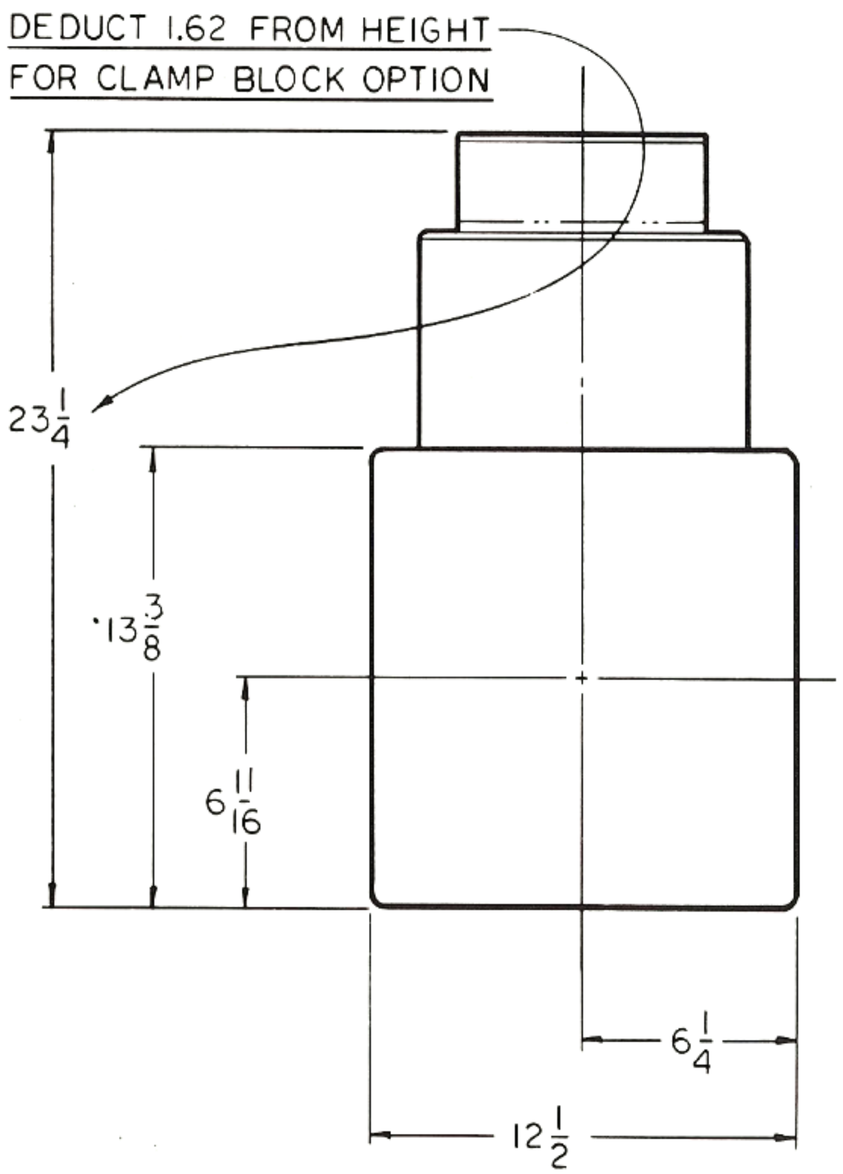

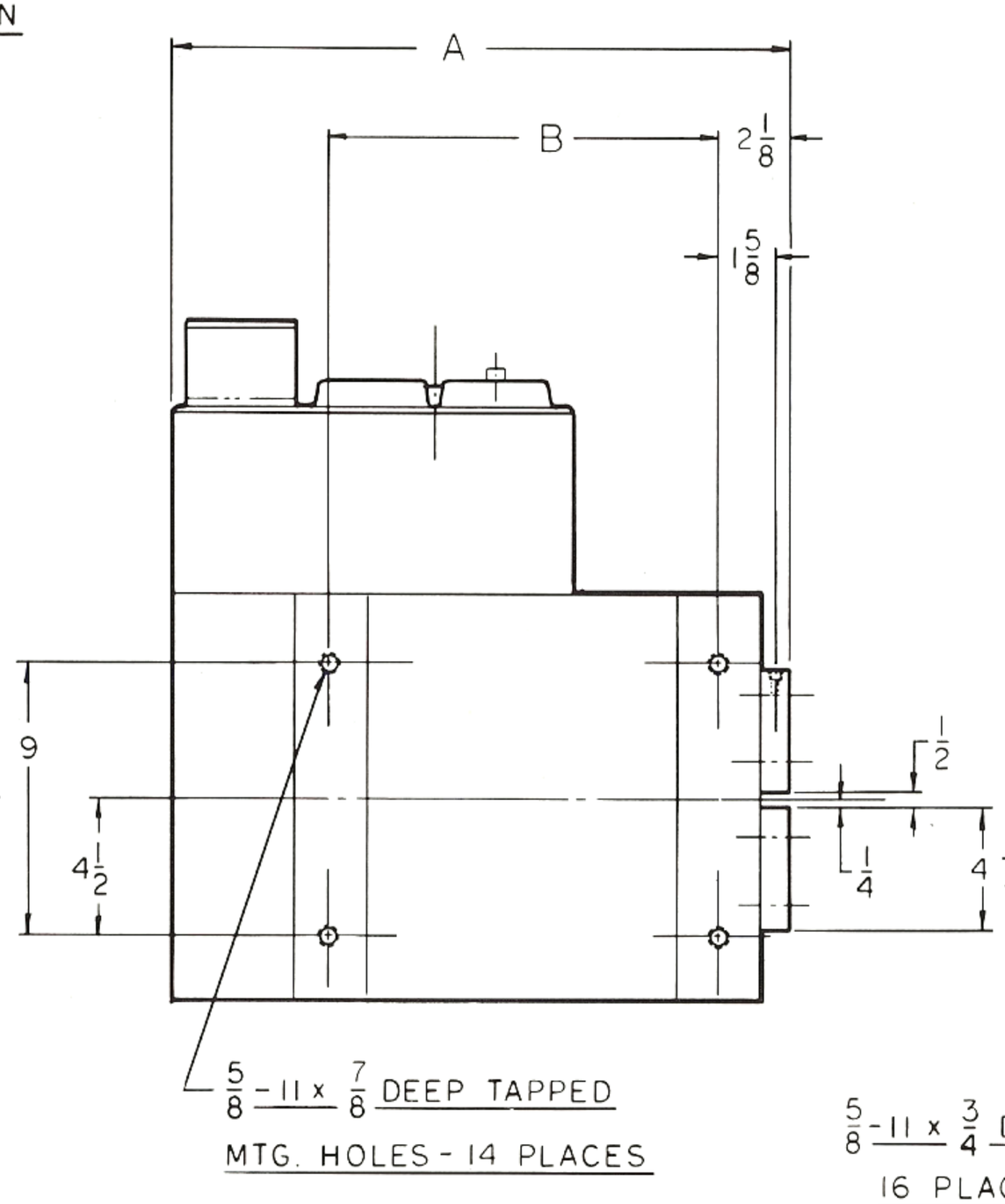

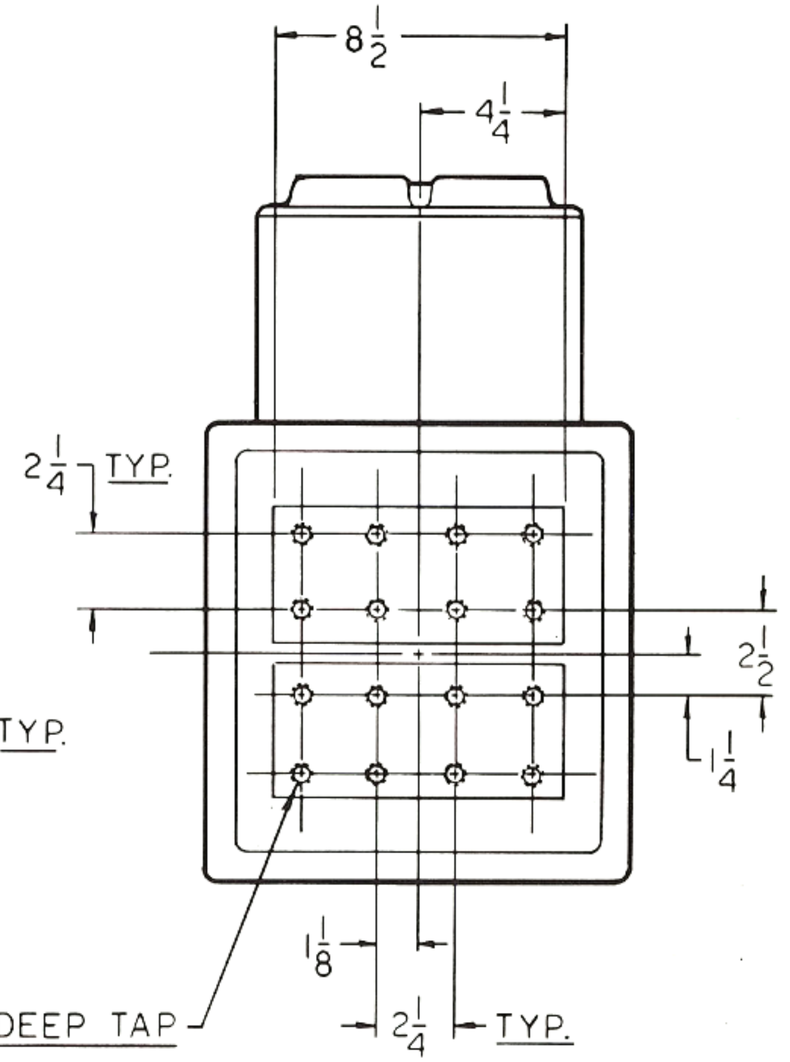

RoMan Manufacturing Inc.

MACHINE TYPE TRANSFORMER

TAP SWITCH: SIDE MOUNT

FRAME CROSS SECTION: 12 1/2" x 13 3/8"

DRAWING NO. R1305

DATE: DEC., 1982

BULLETIN M-4

Machine Type Resistance Welding Transformers

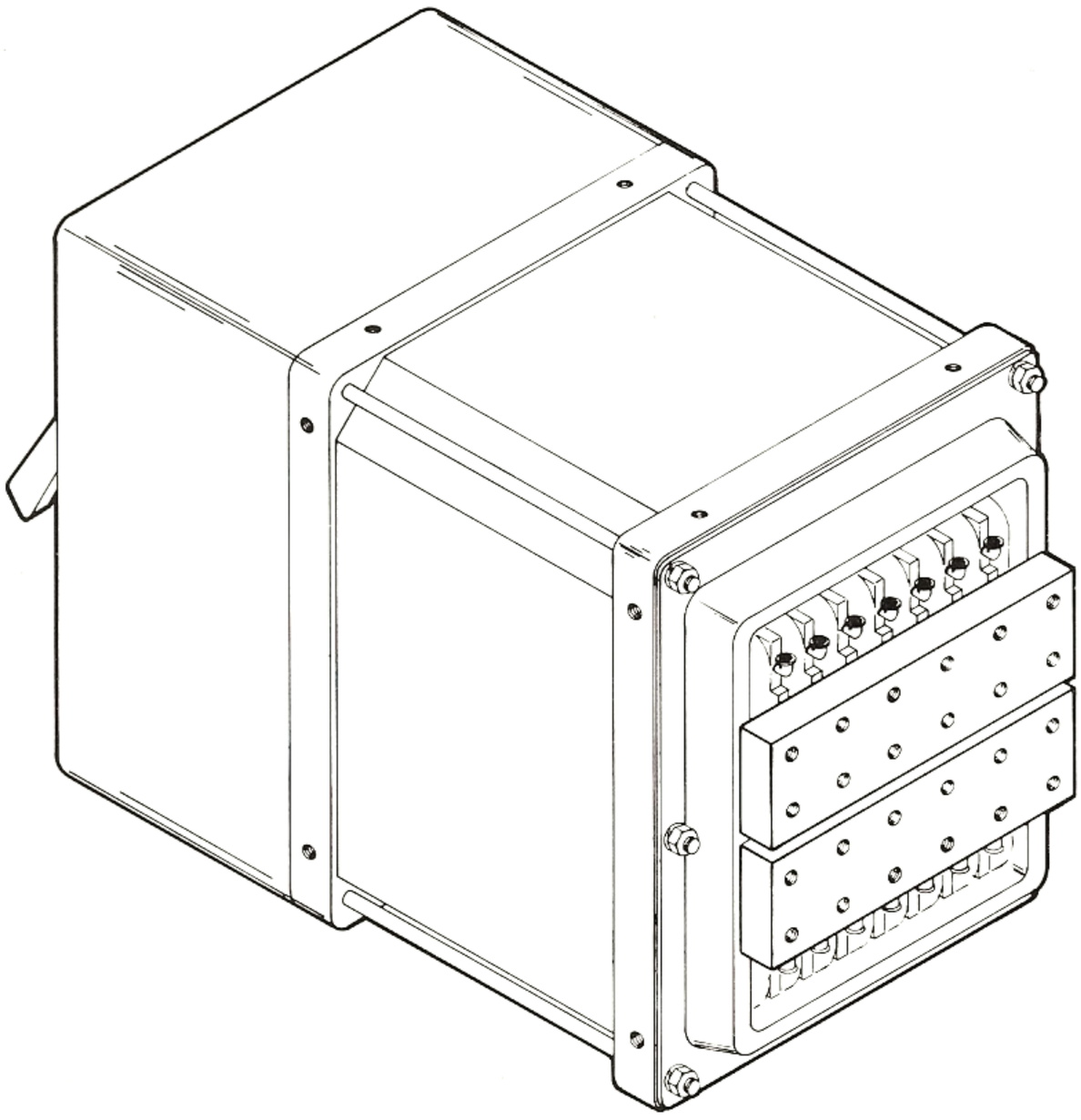

Content Of This Bulletin:

Machine Type Transformer

Heavy Duty Construction

Frame Cross Sections:
for V & VA frames 13⅜" x 20¾"
for U & UA frames 16½" x 20¾"

Stacked Core

250 KVA to 500 KVA

Manufacturing Program

Fixture Type Transformers up to 200 KVA	Request "F" Series Bulletin
Portable Gun Type Transformers up to 200 KVA	Request "G" Series Bulletin
Machine Type Transformers up to 500 KVA	Request "M" Series Bulletin
Transgun/Robot Type Transformers	Request "T" Series Bulletin
Special Products	Request "S" Series Bulletin

RoMan Manufacturing Inc.

861 47th Street, S.W., Grand Rapids, MI 49509 (616) 530-8641

General Description:

- Machine Type Transformer
- Stacked Core
- Frame Cross Sections:
  for V & VA frames 13⅜" x 20¾"
  for U & UA frames 16½" x 20¾"

Ordering Instructions:

- Order by model number shown
- Add "X" to model number if transformer is to be fully potted

KVA RATING	SECONDARY VOLTAGE	NO. OF TAPS	TAP SWITCH LOCATION	RWMA PAD SIZE	MODEL NUMBER 440V/60 Hz	APPROX. WEIGHT (LBS.)	DWG. NO.	FRAME LETTER
250	7.6 to 13.8	8	End Mount	3	M446250V1BOL	975 lbs.	R1286 Page 3	**V**
300	8.6 to 15.7	8	End Mount	3	M446300VA1BOL	1085 lbs.	R1286 Page 3	**VA**
300	8.6 to 15.7	8	End Mount	4	M446300VA1BPL	1100 lbs.	R1286 Page 3	**VA**
400	8.8 to 16.9	8	End Mount	4	M446400U1BPL	1465 lbs.	R1285 Page 4	**U**
500	9.8 to 18.3	8	End Mount	4	M446500UA1BPL	1545 lbs.	R1285 Page 4	**UA**

Standard Features:

- Class "F" insulation
- Stud connections for primary wiring
- Secondary pad sizes and hole spacings to RWMA standards
- Secondary end positively sealed against contamination

Optional Features:

- Voltages and frequencies other than shown available on request
- Thermostats
- Special secondary pad sizes available on request
- Remote tap switch

FRAME LETTER	DIM. "A"	DIM. "B"
V	30.75	11.62
VA	32.37	13.25

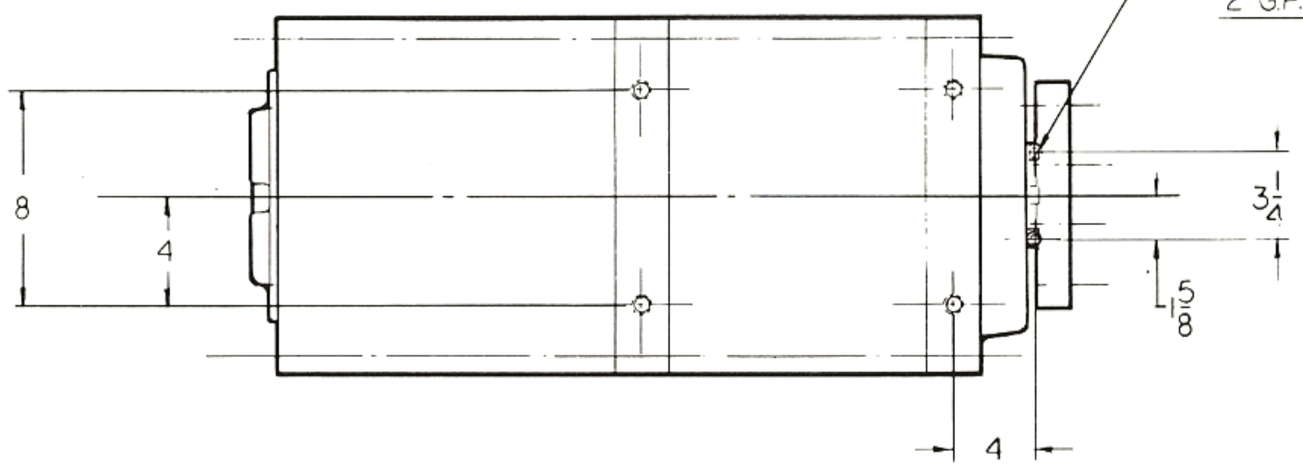

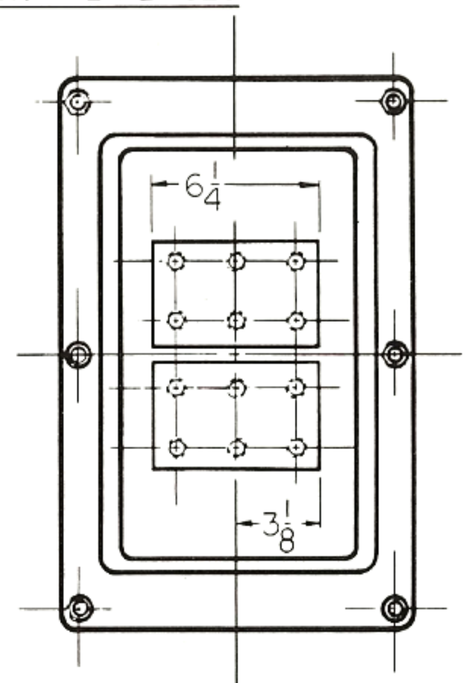

FRONT VIEW WITH # 2 R.W.M.A. PADS

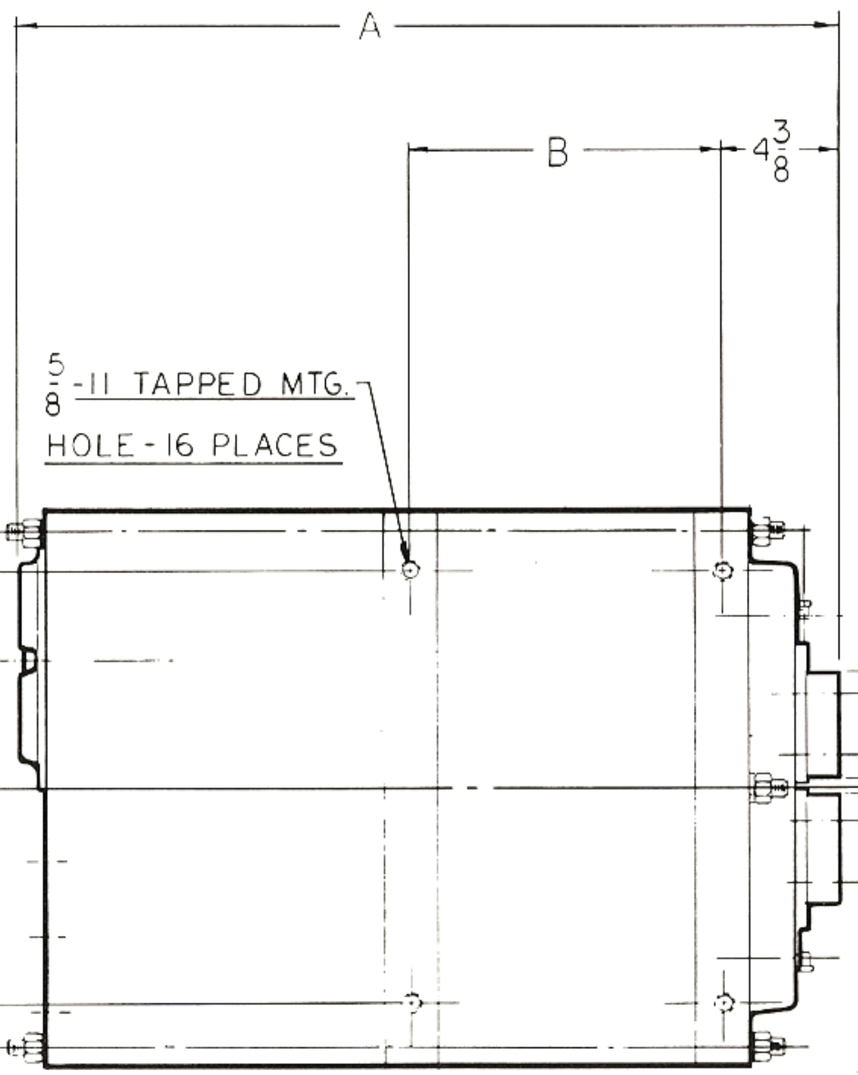

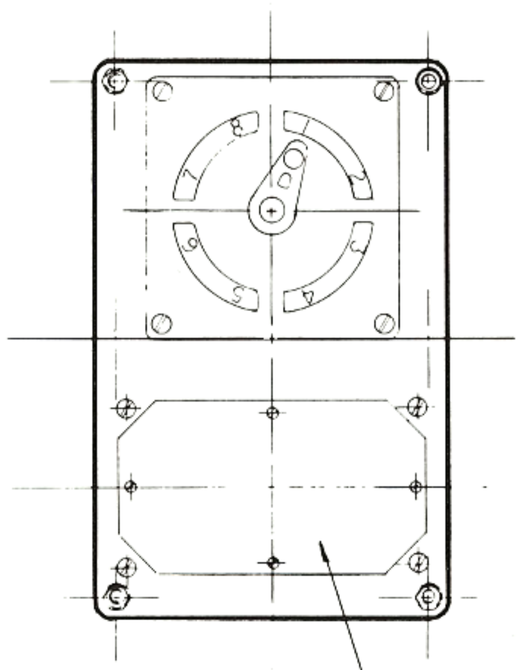

PRIMARY CONNECTION

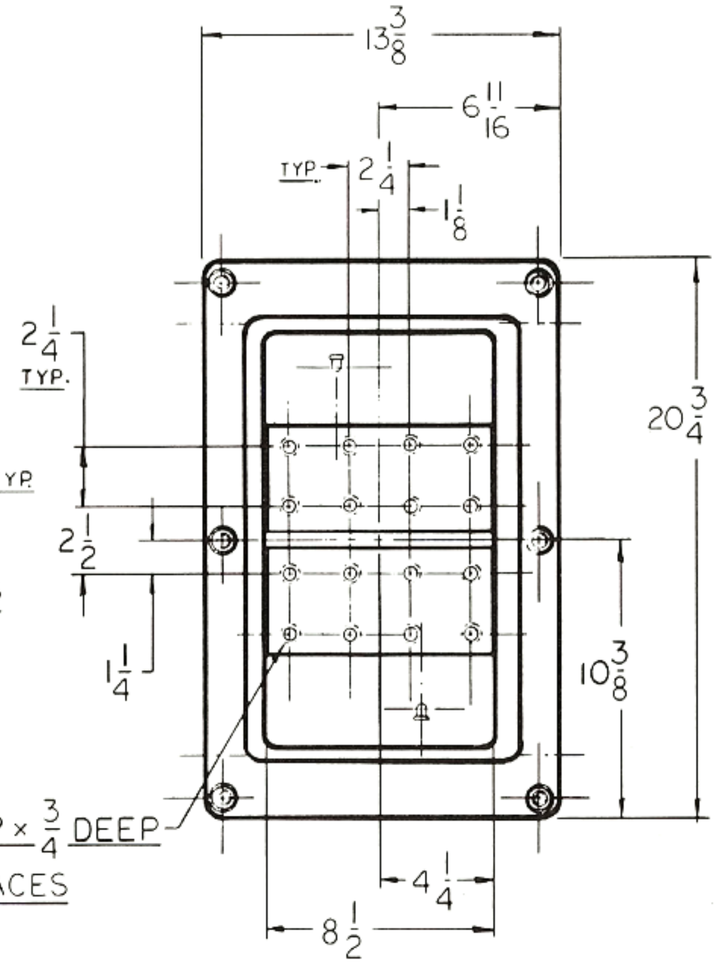

5/8 -11 TAP x 3/4 DEEP
16 PLACES

FRONT VIEW WITH # 3 R.W.M.A. PADS

RoMan Manufacturing Inc.

MACHINE TYPE TRANSFORMER

TAP SWITCH : END MOUNT

FRAME CROSS SECTION: 13 3/8" × 20 3/4"

DRAWING NO. R1286

DATE: OCT., 1982

FRAME LETTER	DIM. "A"	DIM. "B"
U	39.62	14.62
UA	40.62	15.62

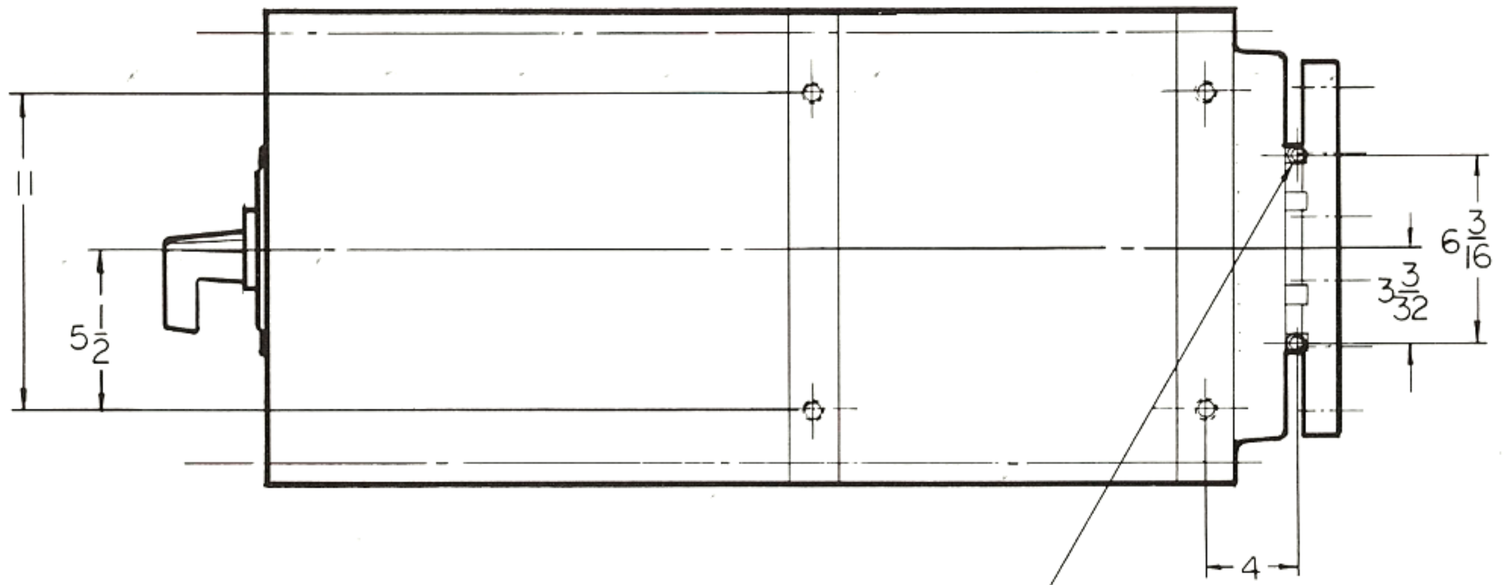

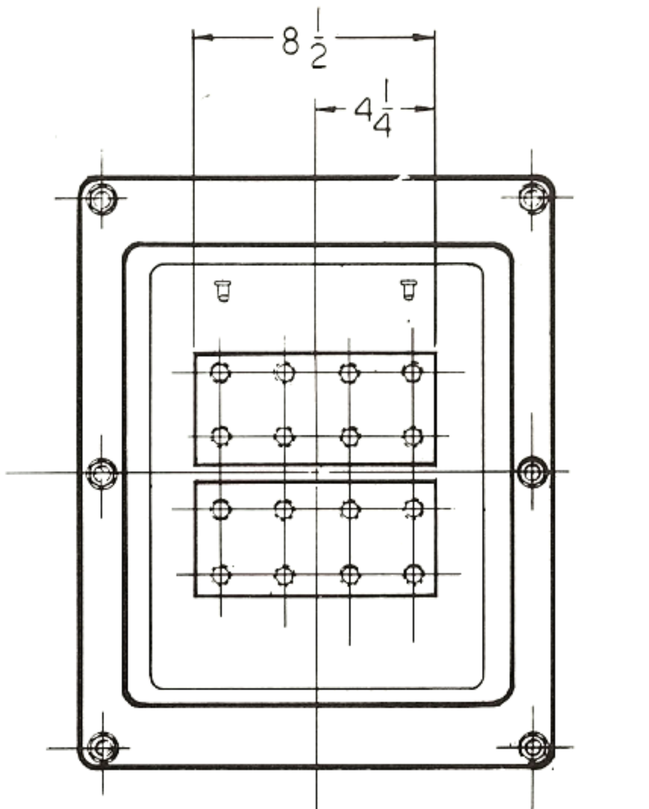

FRONT VIEW WITH # 3 R.W.M.A. PADS

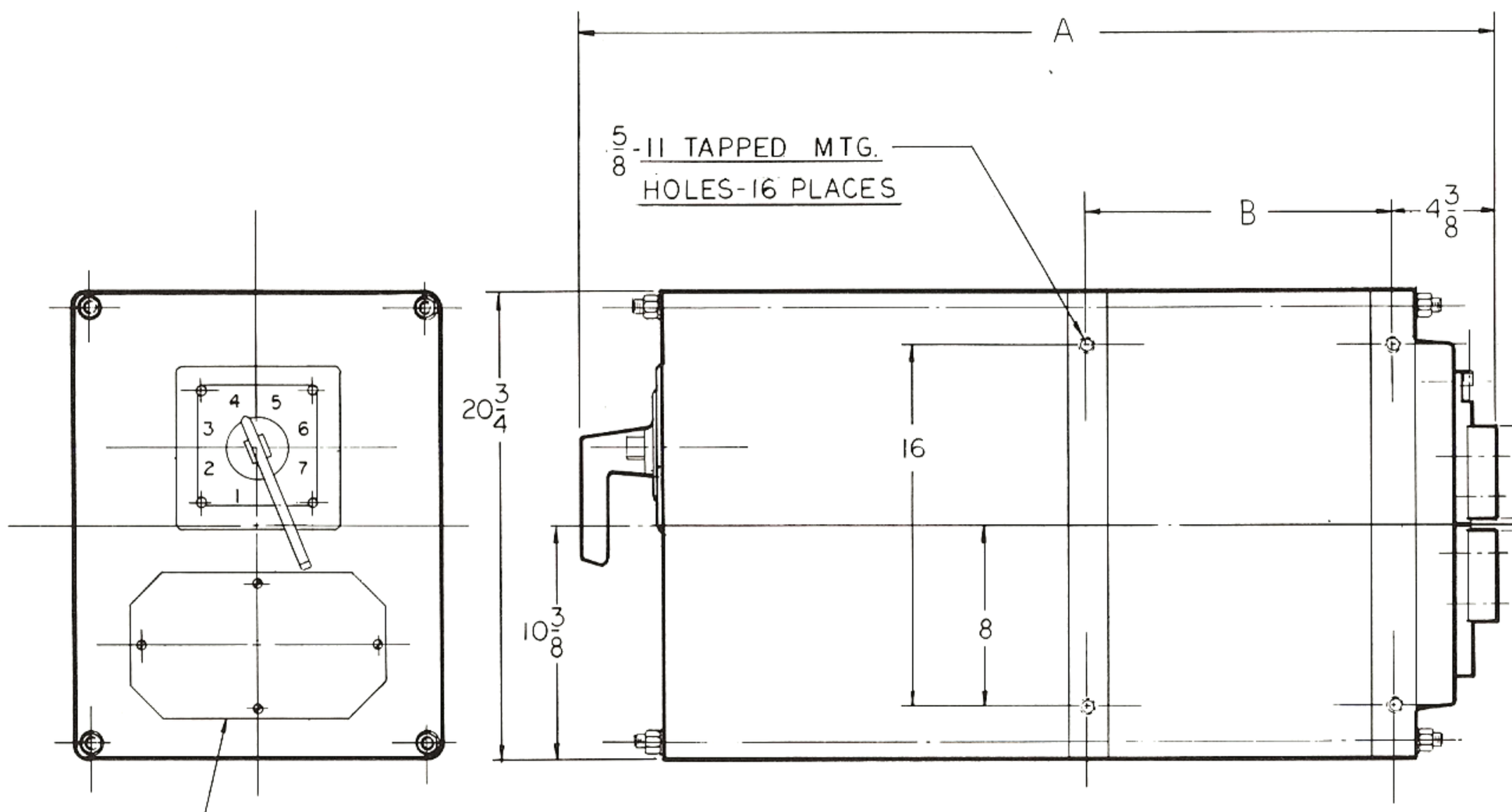

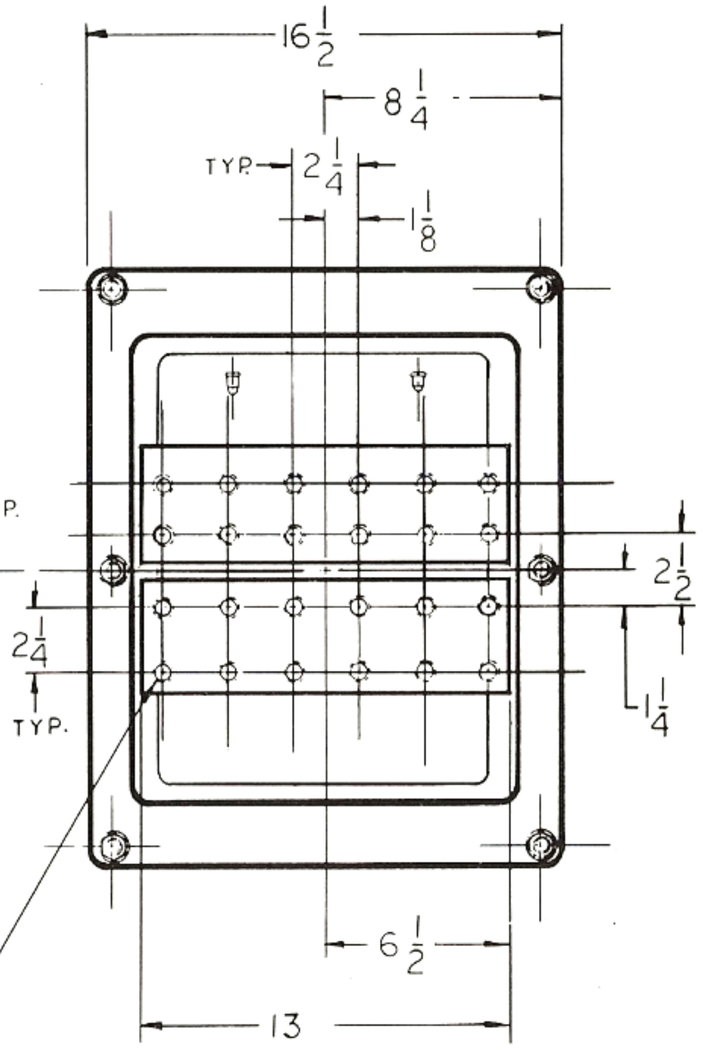

FRONT VIEW WITH # 4 R.W.M.A. PADS

RoMan Manufacturing Inc.

MACHINE TYPE TRANSFORMER

TAP SWITCH END MOUNT

FRAME CROSS SECTION: 16 1/2" x 20 3/4"

DRAWING NO. R1285

DATE: OCT., 1982

Transgun/Robot Type Transformers

Selection Tables & Mechanical Drawings

RoMan Manufacturing Inc.

861 47th Street, S.W., Grand Rapids, MI 49509 Phone (616) 530-8641 FAX (616) 530-8953

Transgun/Robot Type Transformers

Quick Selector Chart

DESCRIPTION	BULLETIN
Frame Cross Section 4¼" x 6¾" Wound Core 22 KVA to 55 KVA Single Secondary Voltage Models	T-1
Frame Cross Section 5" x 6¾" Wound Core 35 KVA to 80 KVA Single Secondary Voltage Models 5-Way Mount Tap Switch Models	T-2 & T-3
Frame Cross Section 5½" x 6¾" Wound Core 35 KVA to 80 KVA Single Secondary Voltage Models 5-Way Mount Tap Switch Models	T-4
Frame Cross Section 6" x 6¾" Wound Core 45 KVA to 80 KVA Single Secondary Voltage Models	T-5

BULLETIN
T-1

Transgun/Robot Type Resistance Welding Transformers

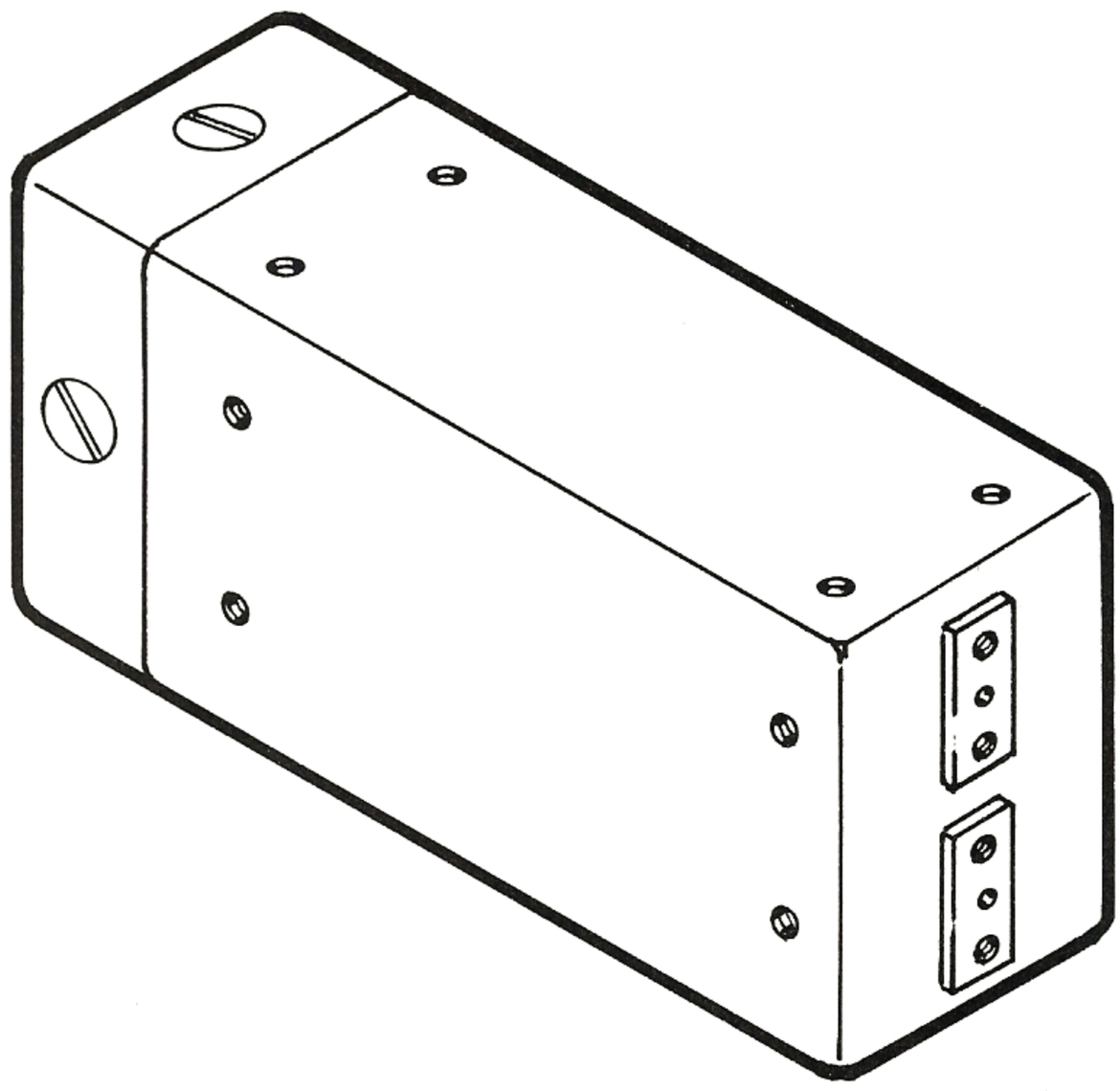

Content Of This Bulletin:

Transgun/Robot Type Transformer
Frame Cross Section 4¼" x 6¾"
Wound Core 22 KVA to 70 KVA
Single Secondary Voltage
General Motors Models

Manufacturing Program

Fixture Type Transformers up to 200 KVA	Request "F" Series Bulletin
Portable Gun Type Transformers up to 200 KVA	Request "G" Series Bulletin
Machine Type Transformers up to 500 KVA	Request "M" Series Bulletin
Transgun/Robot Type Transformers	Request "T" Series Bulletin
Special Products	Request "S" Series Bulletin

RoMan Manufacturing Inc.
861 47th Street, S.W., Grand Rapids, MI 49509 Phone (616) 530-8641 FAX (616) 530-8953

General Description:

- Transgun/Robot Type Transformer
- Wound Core
- Frame Cross Section 4¼'' x 6¾''

Ordering Instructions:

- Order by model number shown
- Specify primary conduit opening desired 1¼ NPT or 1½ NPT

STANDARD MODELS

KVA RATING	SECONDARY VOLTAGE	IMPEDANCE REFERRED TO SECONDARY IN MICRO OHMS		MODEL NUMBER		WEIGHT (LBS)	DWG. NO.	FRAME LETTER
		POLAR	RECTANGULAR	230V/60 Hz	460V/60 Hz			
22	3.40	63.8 /32.2°	54 + j 33.9	T23622RA1KTWX	T46622RA1KTWX	45	R1445 Page 3	RA
27	4.25	70.6 /35.5°	57.5 + j 40.9	T23627RB1KTWX	T46627RB1KTWX	57	R1445 Page 3	RB
35	5.11	78.7 /33.4°	65.7 + j 43.4	T23635RC1KTWX	T46635RC1KTWX	66	R1445 Page 3	RC
42	5.89	86.4 /33.2°	72.3 + j 47.4		T46642RD1KTWX	73	R1445 Page 3	RD
55	6.76	93.9 /34.7°	77.2 + j 53.5		T46655RE1KTWX	85	R1445 Page 3	RE
62	7.67	105 /31.9°	89.2 + j 55.4		T46662RF1KTWX	96	R1445 Page 3	RF
70	8.52	113.8 /36.1°	96.0 + j 61.1		T46670RG1KTWX	107	R1445 Page 3	RG

GENERAL MOTORS MODELS

KVA RATING	SECONDARY VOLTAGE	IMPEDANCE REFERRED TO SECONDARY IN MICRO OHMS		MODEL NUMBER / 480V/60 Hz		WEIGHT (LBS)	DWG. NO.	FRAME LETTER
		POLAR	RECTANGULAR	WITHOUT RECEPTACLE	WITH RECEPTACLE			
22	3.58	63.8 /32.2°	54 + j 33.9	T48622RA1766WX	T48622RA1428WX	45	R1599 Page 4	RA
27	4.44	70.6 /35.5°	57.5 + j 40.9	T48627RB1767WX	T48627RB1429WX	57	R1599 Page 4	RB
35	5.33	78.7 /33.4°	65.7 + j 43.4	T48635RC1768WX	T48635RC1430WX	66	R1599 Page 4	RC
42	6.15	86.4 /33.2°	72.3 + j 47.4	T48642RD1769WX	T48642RD1431WX	73	R1599 Page 4	RD
55	7.00	93.9 /34.7°	77.2 + j 53.5	T48655RE1770WX	T48655RE1427WX	85	R1599 Page 4	RE
62	8.00	105 /31.9°	89.2 + j 55.4	T48662RF1771WX	T48662RF1603WX	96	R1599 Page4	RF
70	8.90	113.8 /36.1°	96.0 + j 61.1	T48670RG1774WX	T48670RG1773WX	107	R1599 Page 4	RG

Standard Features:

- Class "F" insulation
- Fully potted construction
- Inter changable with other manufactures
- Thermostat

Optional Features:

- Voltages and frequencies other than shown available on request
- Special secondary pads
- Primary disconnect plug (Amphenol)
- Primary power service cable to automotive standards
- Secondary shunt adaptors
- Metric Threads

FRAME LETTER	DIM "A"	DIM "B"
RA	12.06	7.00
RB	13.56	8.50
RC	15.06	10.00
RD	16.56	11.50
RE	18.06	13.00
RF	19.56	14.50
RG	21.06	16.00

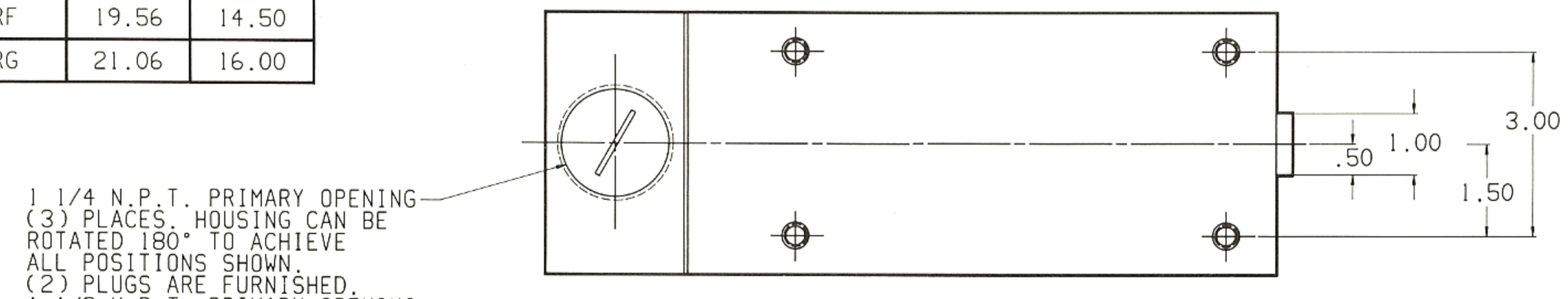

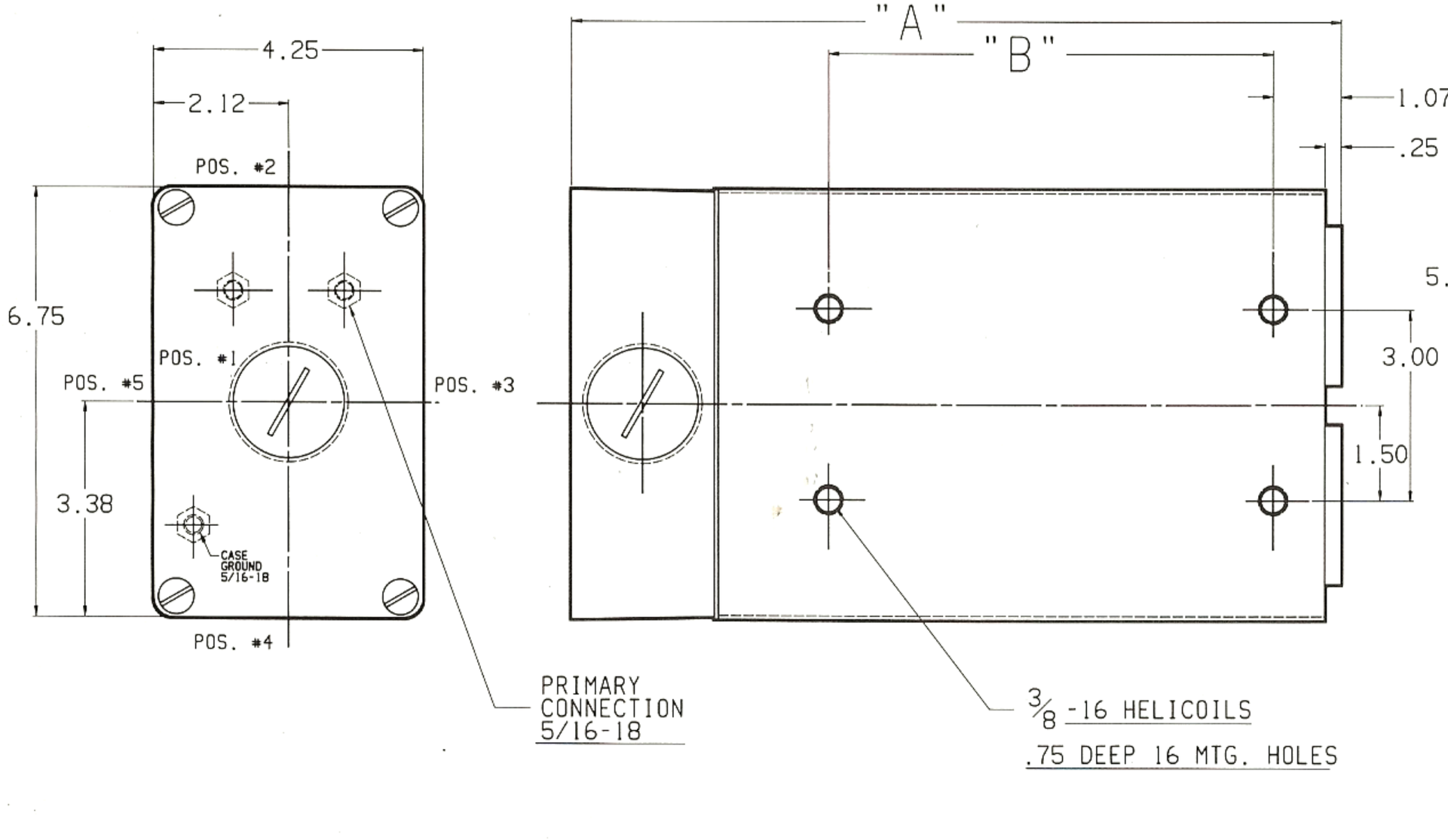

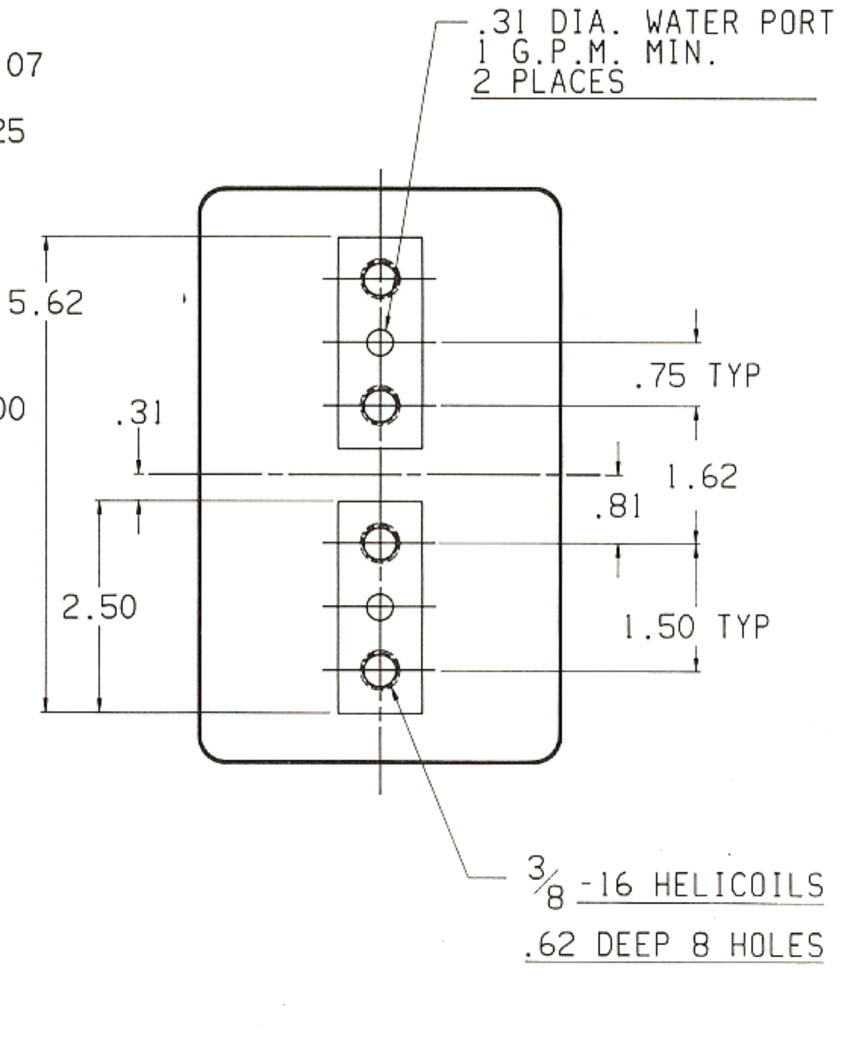

RoMan Manufacturing Inc.

TRANSGUN/ROBOT TRANSFORMER

FRAME CROSS SECTION : 4 1/4" x 6 3/4"

DRAWING NO. R1445
DATE: OCT. 1987

REV. - C
01Aug89

Drawing No. R1599

DATE 11/89

FRAME LETTER	DIM "A"	DIM "B"
RA	12.06	7.00
RB	13.56	8.50
RC	15.06	10.00
RD	16.56	11.50
RE	18.06	13.00
RF	19.56	14.50
RG	21.06	16.00

PIN TYPE RECEPTACLE
PER CPC SPEC MDS-534.
FURNISHED IN POS. #2
UNLESS OTHERWISE SPECIFIED.

IMPORTANT

THE SECONDARY CENTER TAP GROUND AND TRANSFORMER CASE GROUND ARE ELECTRICLY CONNECTED (JUMPERED) INSIDE THE JUNCTION BOX COMPLYING WITH CPC SPECIFICATION MDS-419 FOR ROBOTIC WELDING TRANSFORMERS. IF TRANSFORMER IS USED IN APPLICATIONS WERE ONE SIDE OF THE WELDING CIRCUIT IS PERMANENTLY GROUNDED THE JUMPER MUST BE REMOVED TO PREVENT GROUND-LOOP CIRCULATING CURRENTS. IN THIS CONDITION ONLY THE TRANSFORMER CASE IS GROUNDED.

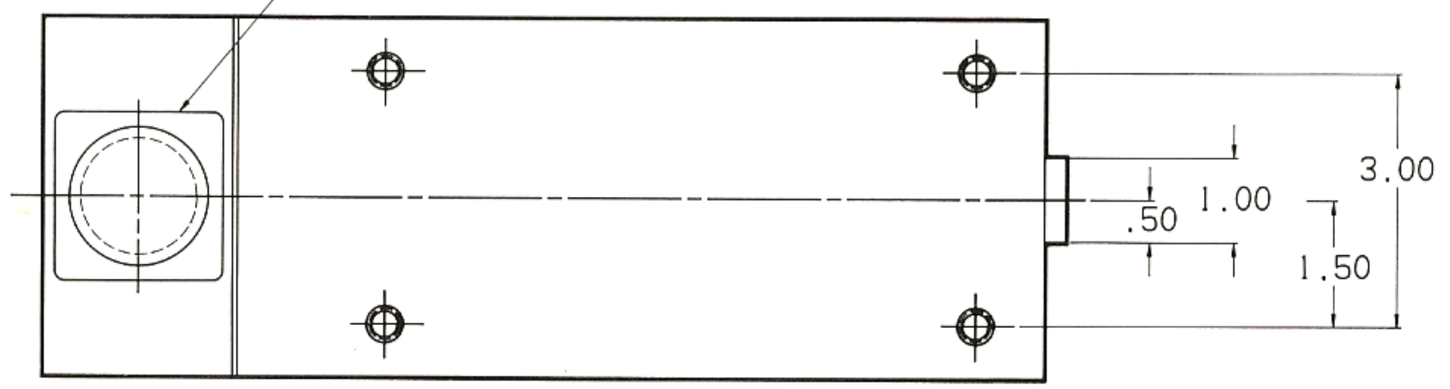

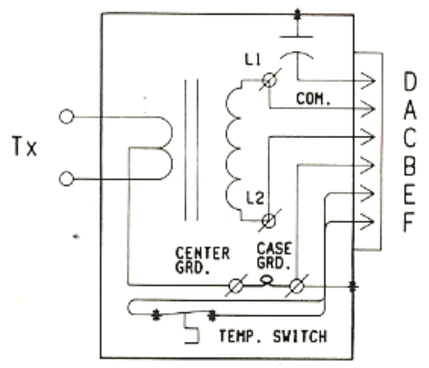

PLUG SCHEMATIC

NOTE:

MODELS WITHOUT RECEPTACLES WILL BE FURNISHED WITHOUT THE CAPACITOR OR RECEPTACLE. A 1 1/4"NPT HOLE WILL BE FURNISHED IN 3 POS. AND CAN BE ROTATED 180° TO ACHIEVE ALL POSITIONS.

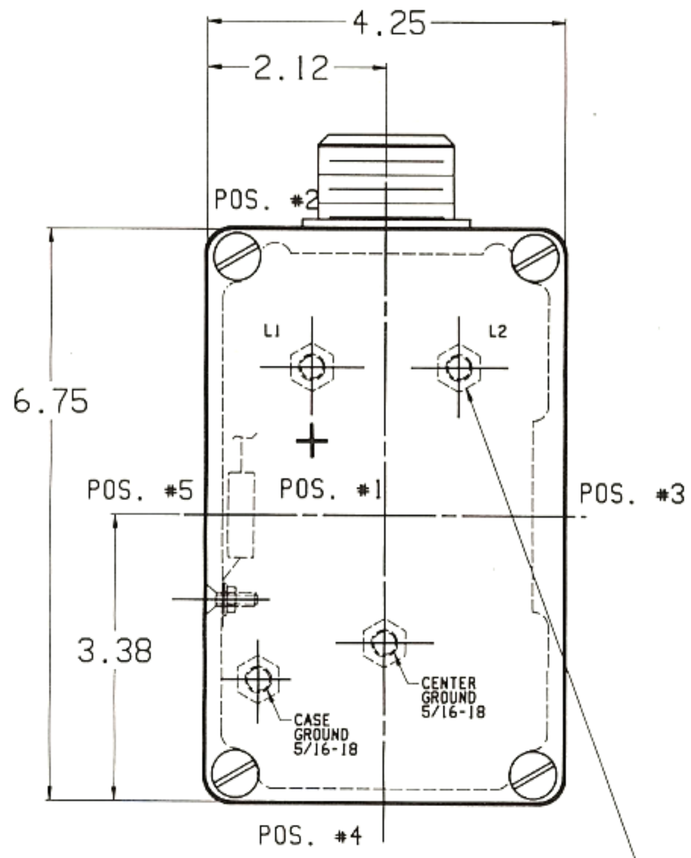

PRIMARY CONNECTION 5/16-18

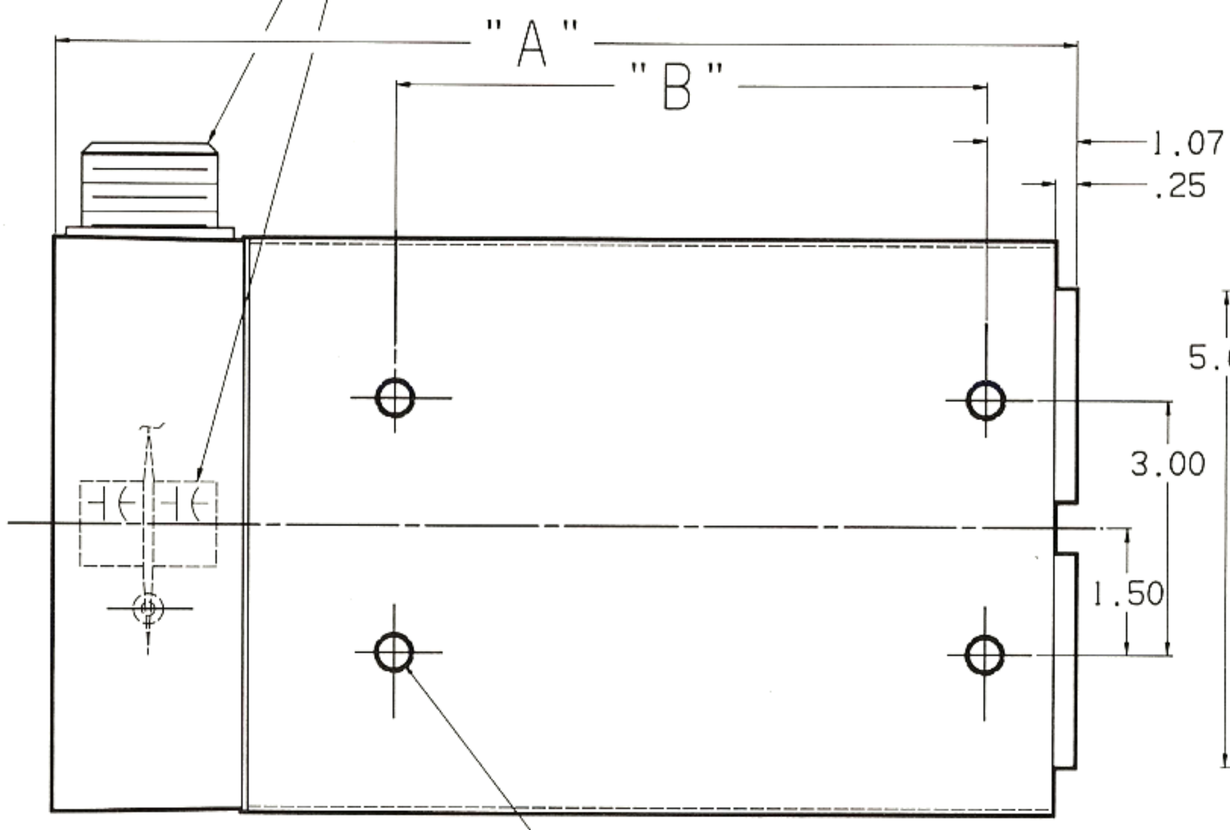

3/8 -16 HELICOILS
.75 DEEP 16 MTG. HOLES

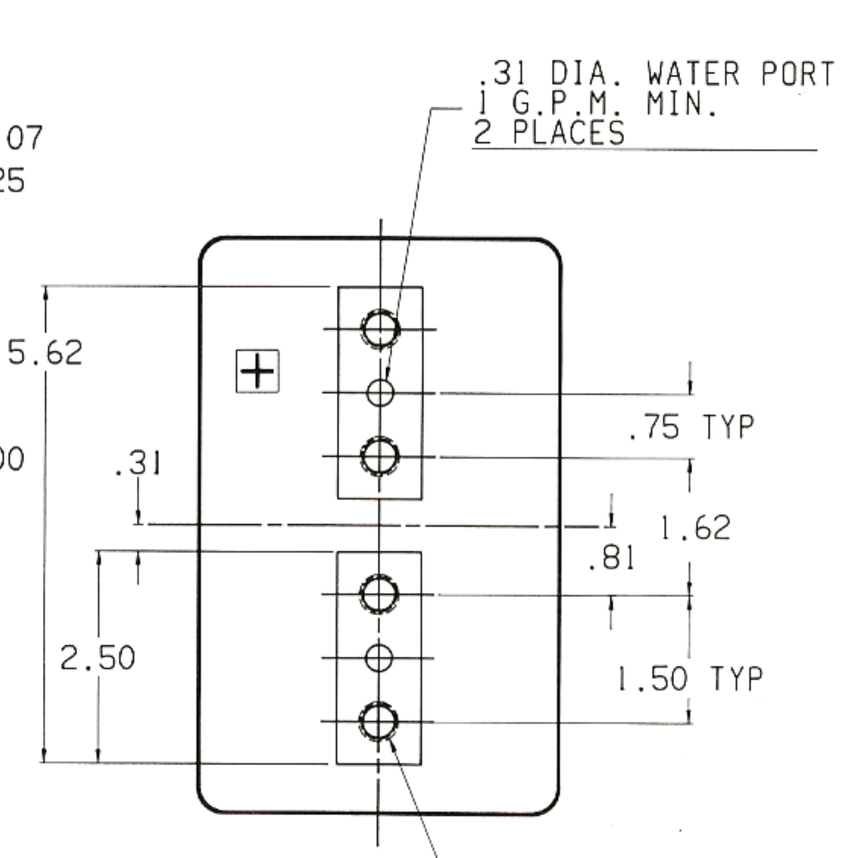

3/8 -16 HELICOILS
.62 DEEP 8 HOLES

RoMan Manufacturing Inc.

TRANSGUN/ROBOT TRANSFORMER

GENERAL MOTORS SPECIFICATIONS

FRAME CROSS SECTION : 4 1/4" x 6 3/4"

DRAWING NO. R1599
DATE: OCT. 1987

REV. - B
01Aug89

BULLETIN
T-2 & T-3

Transgun/Robot Type Resistance Welding Transformers

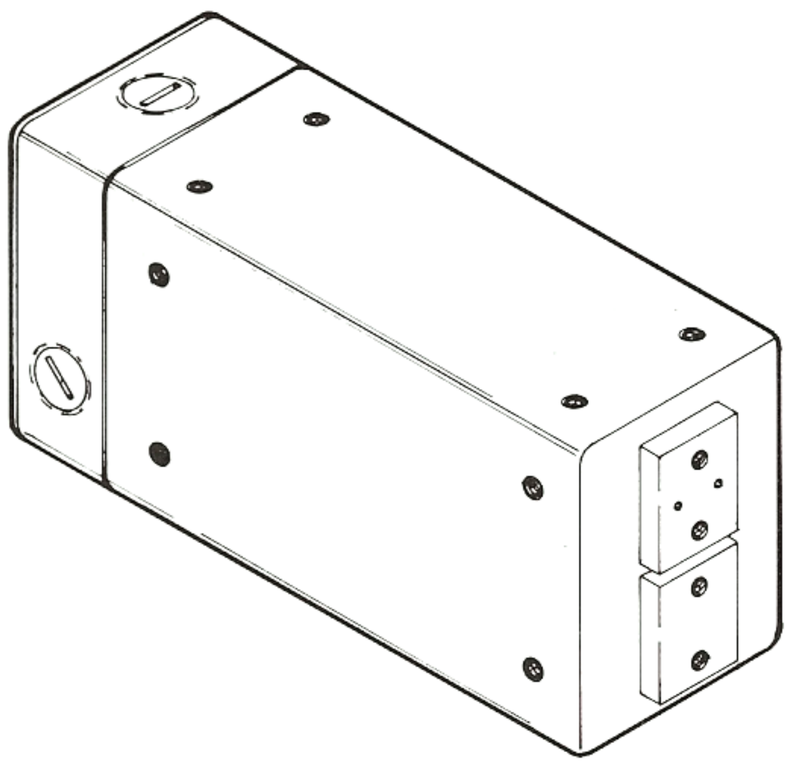

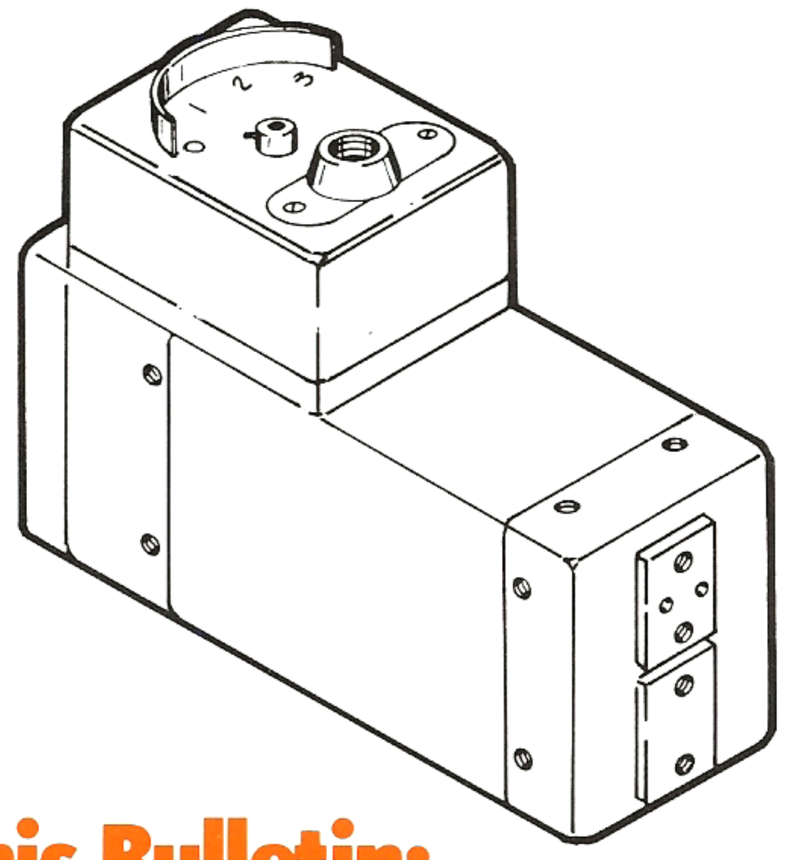

Content Of This Bulletin:

Transgun/Robot Type Transformer
Frame Cross Section 5'' x 6¾''
Wound Core 35 KVA to 80 KVA
Single Secondary Voltage
5-Way Mount Tap Switch
Chrysler Models

Manufacturing Program

Fixture Type Transformers up to 200 KVA	Request ''F'' Series Bulletin
Portable Gun Type Transformers up to 200 KVA	Request ''G'' Series Bulletin
Machine Type Transformers up to 500 KVA	Request ''M'' Series Bulletin
Transgun/Robot Type Transformers	Request ''T'' Series Bulletin
Special Products	Request ''S'' Series Bulletin

RoMan Manufacturing Inc.
861 47th Street, S.W., Grand Rapids, MI 49509 Phone (616) 530-8641 FAX (616) 530-8953

General Description:

- Transgun/Robot Type Transformer
- Wound Core
- Frame Cross Section 5'' x 6¾''

Ordering Instructions:

- Order by model number shown
- Specify conduit opening position on Single Secondary Voltage Models
- Specify tap switch position on 5-Way Mount Models

SINGLE SECONDARY VOLTAGE MODELS

KVA RATING	SECONDARY VOLTAGE	IMPEDANCE REFERRED TO SECONDARY IN MICRO OHMS		MODEL NUMBER		WEIGHT (LBS)	DWG. NO.	FRAME LETTER
		POLAR	RECTANGULAR	230V/60 Hz	460V/60 Hz			
35	3.97	51.7 /21.6°	48.1 + j 19.1	T23635SA1KUWX	T46635SA1KUWX 22-970-7225*	62	R1426 Page 3	SA
50	5.00	59.3 /22.2°	54.9 + j 22.4		T46650SB1KUWX 22-970-7226*	72	R1426 Page 3	SB
65	6.05	63.8 /20°	60 + j 21.8		T46665SC1KUWX 22-970-7227*	85	R1426 Page 3	SC
80	7.30	74.6 /17.7°	71.1 + j 22.7		T46680SD1KUWX 22-970-7228*	104	R1426 Page 3	SD
90	8.52	78.87 /19.8°	74.2 + j 26.7		T46690SE1KUWX	113	R1426 Page 3	SE

*Denotes Chrysler Code Number

5-WAY MOUNT TAP SWITCH MODELS

KVA RATING	SECONDARY VOLTAGE 1	2	3	IMPEDANCE REFERRED TO SECONDARY IN MICRO OHMS		MODEL NUMBER		WEIGHT (LBS)	DWG. NO.	FRAME LETTER
				POLAR	RECTANGULAR	230V/60 Hz	460V/60 Hz			
35	3.31	3.52	3.81	51.5 /19.3°	48.6 + j 17	T23635SA1DUWX	T46635SA1DUWX (41-704-0000)*	67	R1425 Page 4	SA
40	4.07	4.38	4.74	62.6 /19.8°	58.9 + j 21.2	T23640SB1DUWX	T46640SB1DUWX 22-971-5042*	79	R1425 Page 4	SB
55	5.04	5.46	5.88	65.9 /20.5°	61.7 + j 23.1		T46655SC1DUWX 22-971-5044*	92	R1425 Page 4	SC
65	6.30	6.76	7.30	78 /19.6°	73.5 + j 26.1		T46665SD1DUWX 22-971-5046*	109	R1425 Page 4	SD

*Denotes Chrysler Code Number

Standard Features:

- Class ''F'' insulation
- Fully potted construction
- Interchangable with other manufactures
- Thermostat on Single Secondary Voltage Models

Optional Features:

- Voltages and frequencies other than shown available on request
- Thermostat on 5-Way Mount Tap Switch Models
- Special secondary pads
- Primary disconnect plug (Amphenol)
- Primary power service cable to automotive standards
- Metric threads
- Secondary shunt adaptors

FRAME LETTER	DIM "A"	DIM "B"
SA	13.75	8.00
SB	15.25	9.50
SC	16.75	11.00
SD	19.00	13.25
SE	20.75	15.00

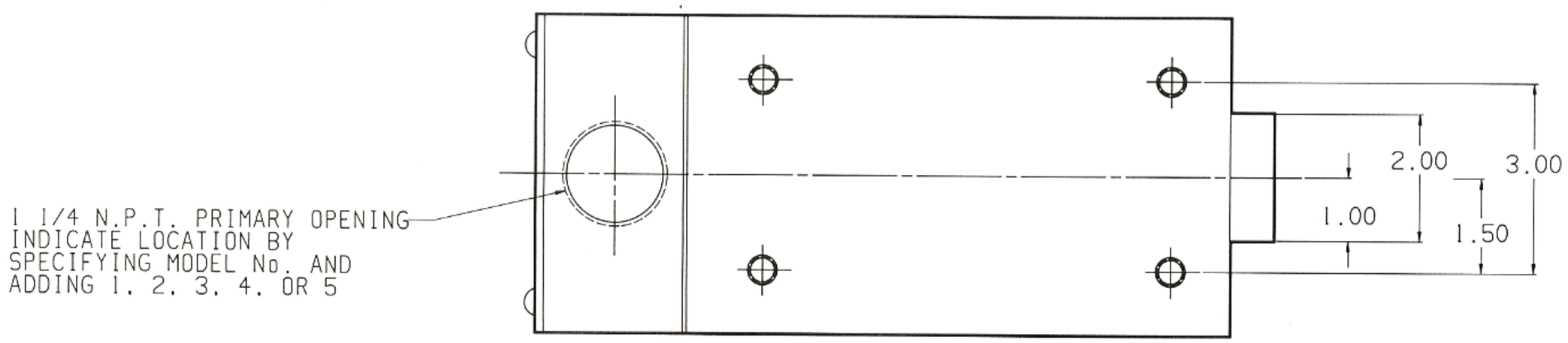

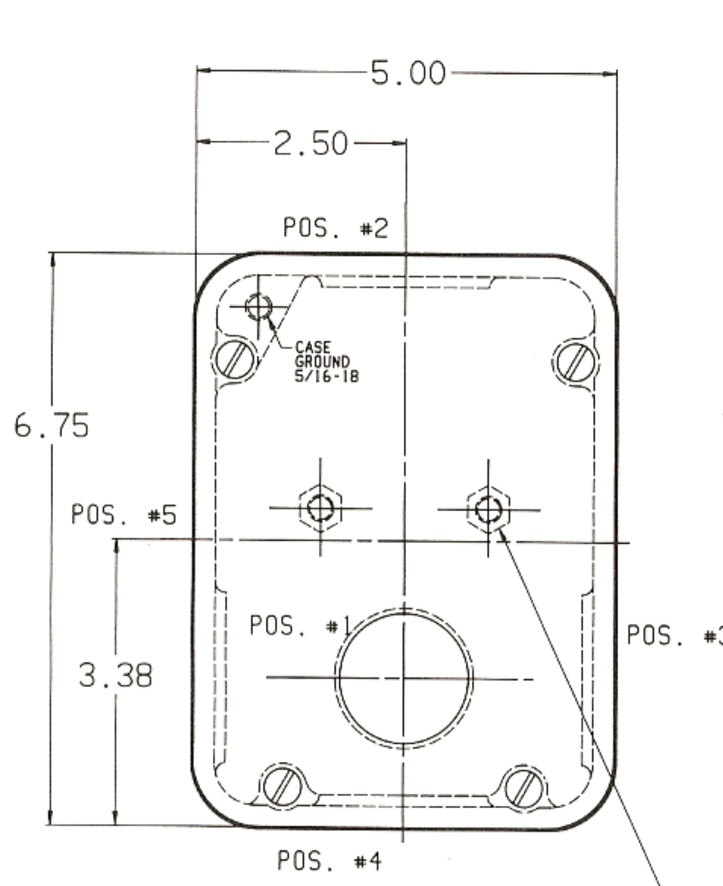

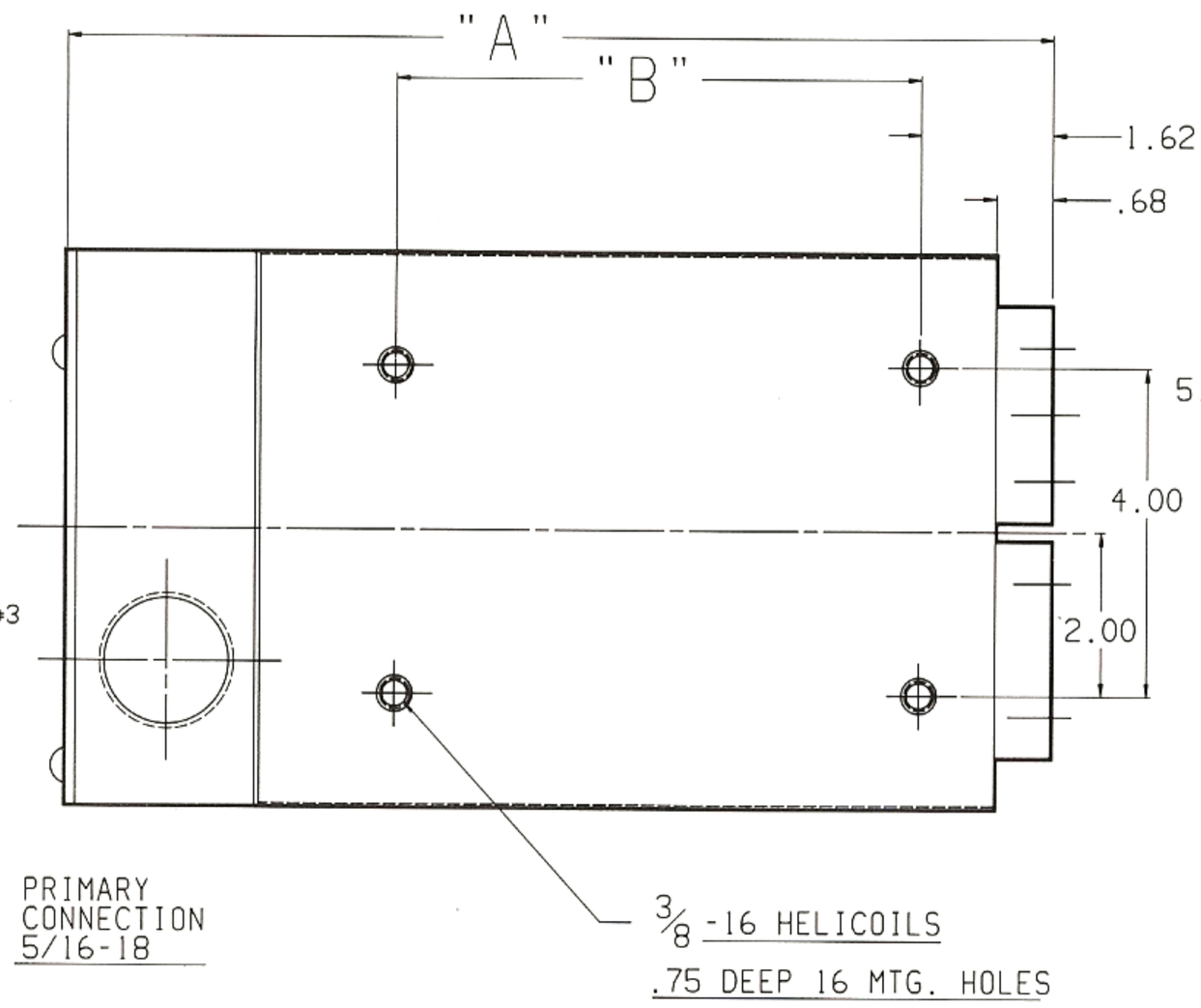

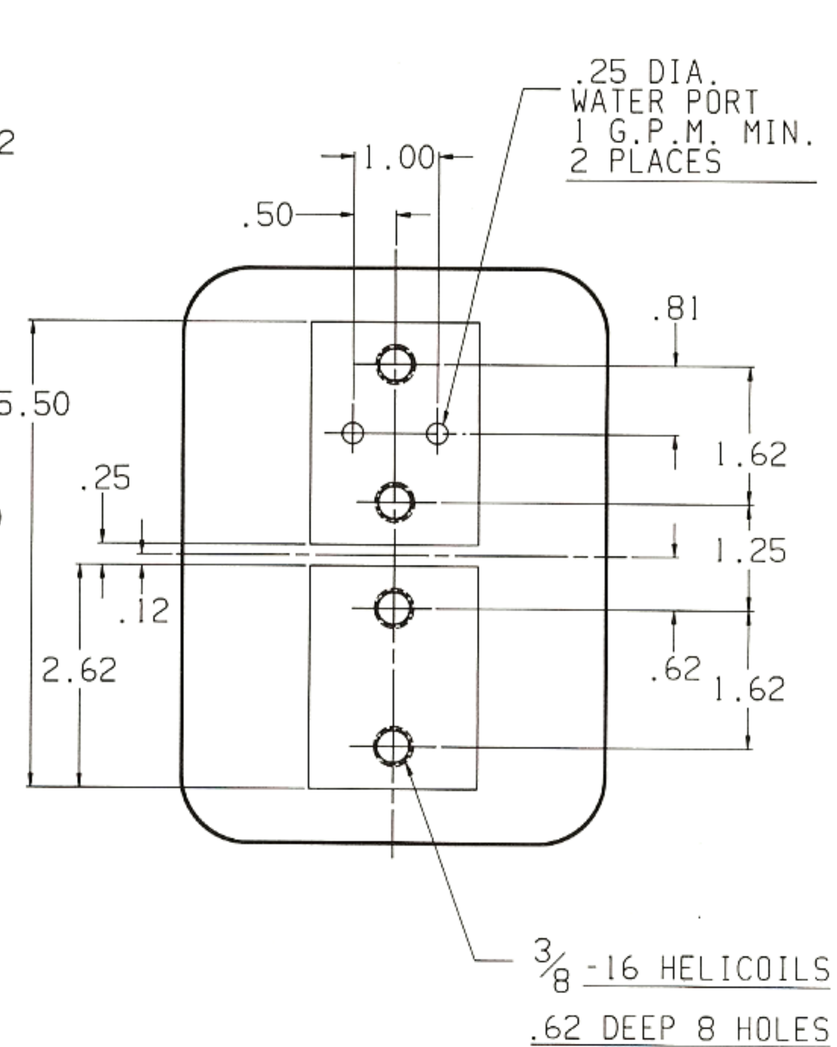

RoMan Manufacturing Inc.

TRANSGUN/ROBOT TRANSFORMER

FRAME CROSS SECTION : 5" x 6 3/4"

DRAWING NO. R1426
DATE: OCT. 1987

REV. - B
15/MAR/89

Drawing No. R1426

FRAME LETTER	DIM "A"	DIM "B"	DIM "C"
SA	16.25	8.00	13.00
SB	17.75	9.50	14.50
SC	19.25	11.00	16.00
SD	21.50	13.25	18.25

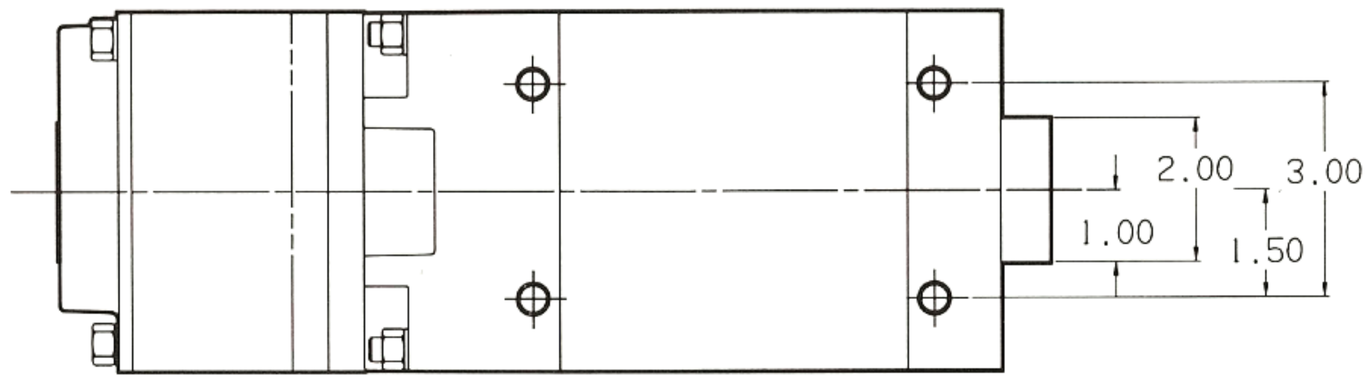

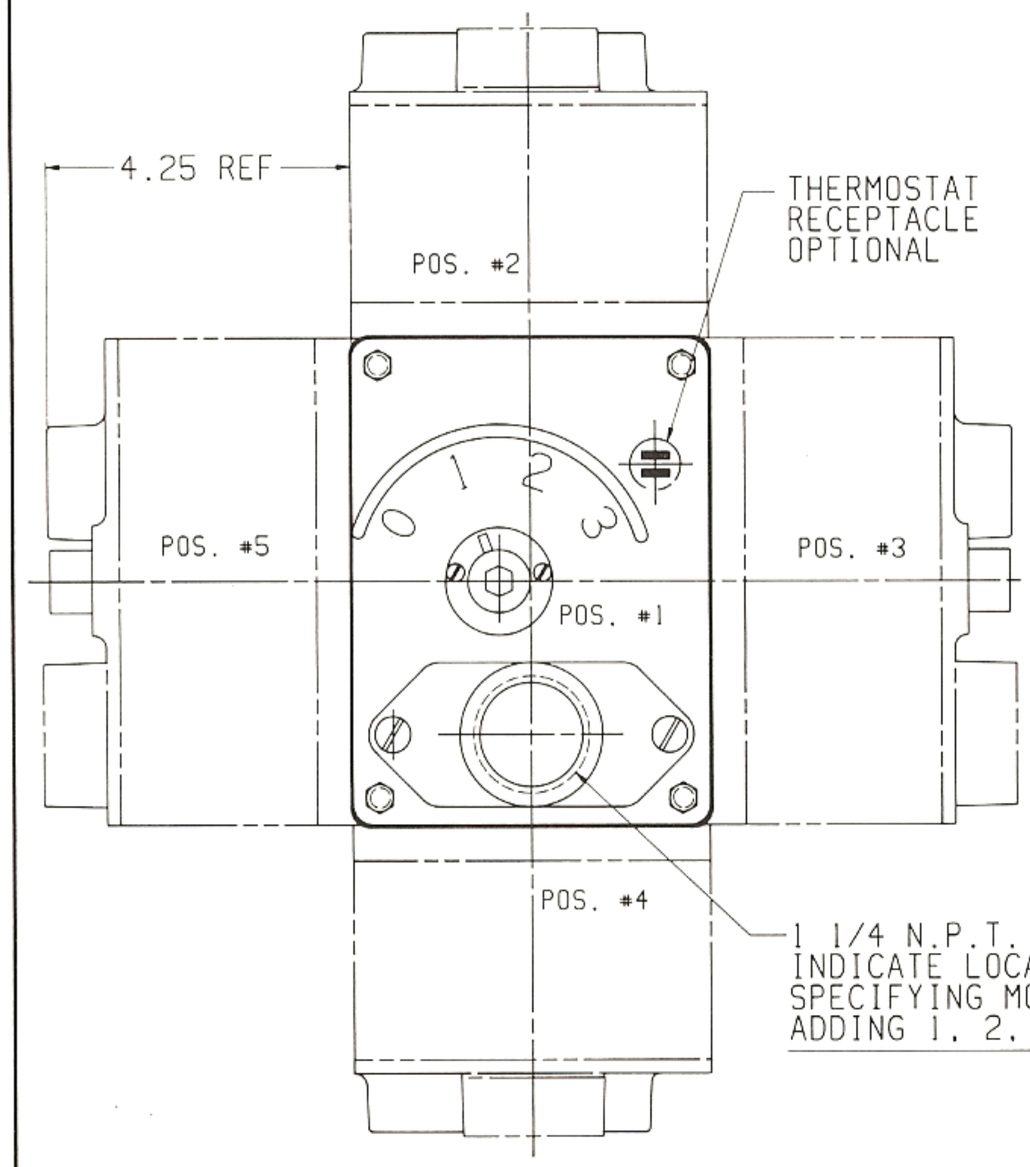

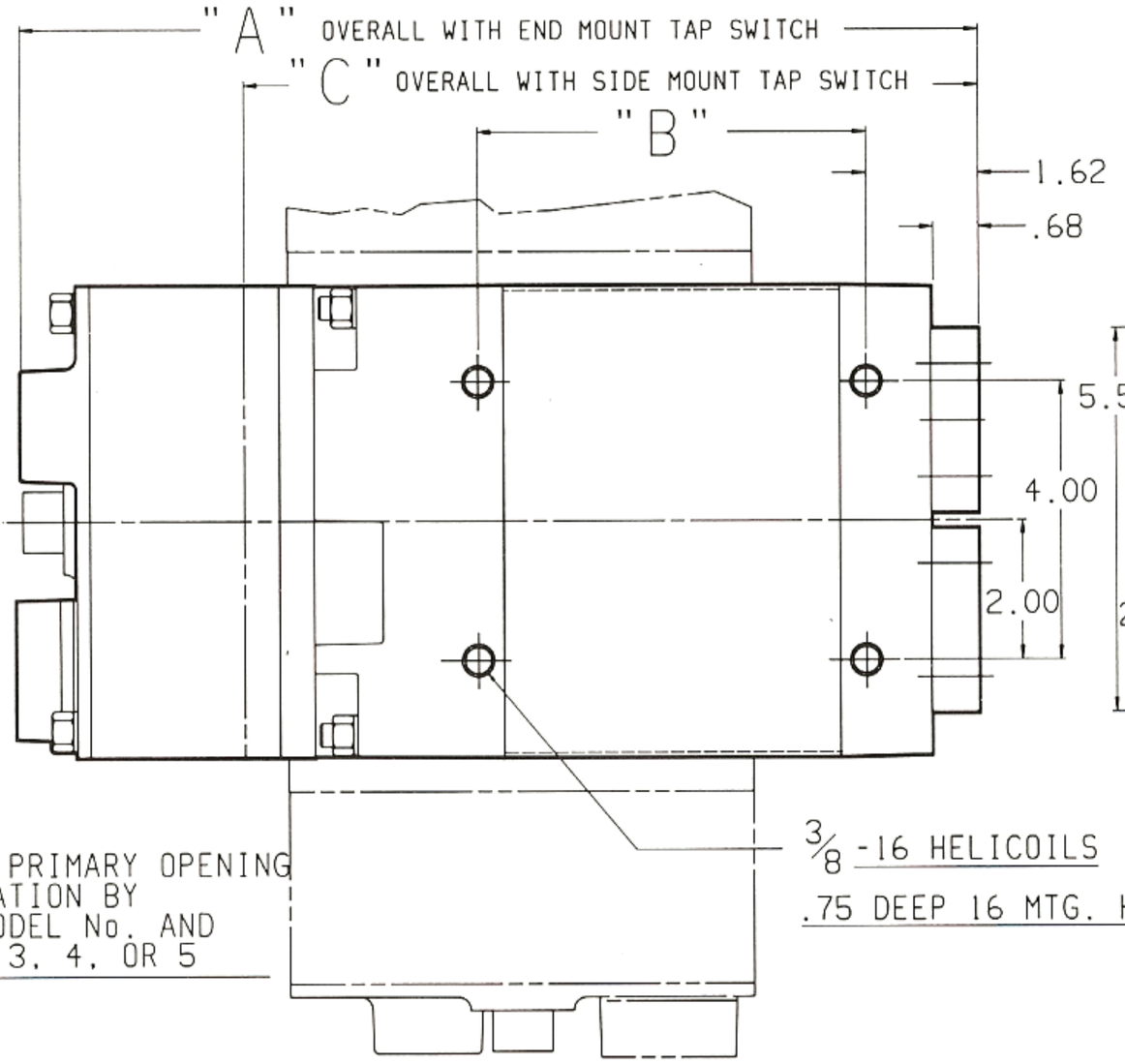

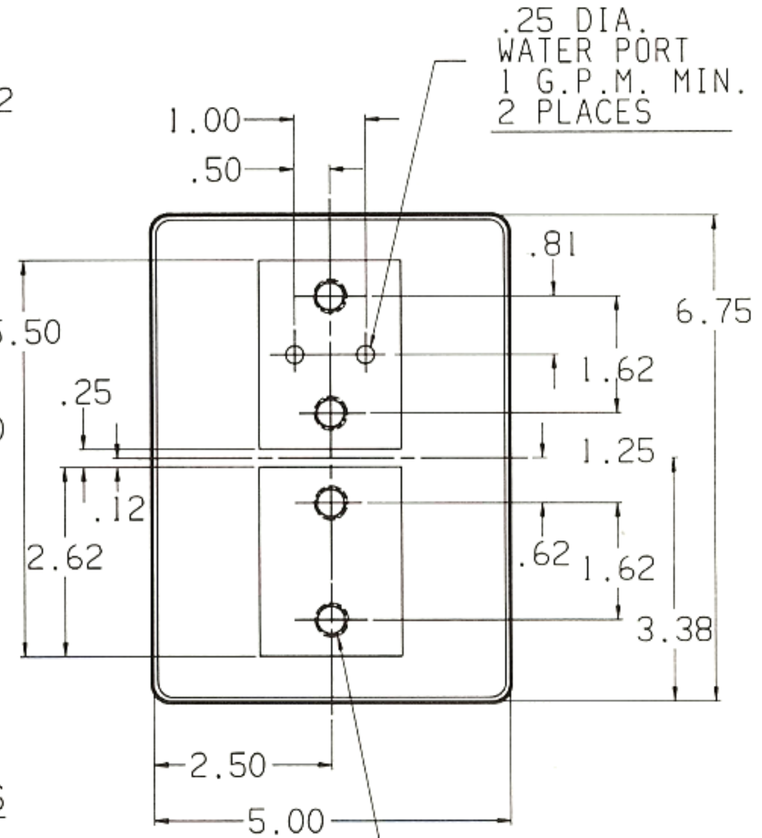

RoMan Manufacturing Inc.

TRANSGUN/ROBOT TRANSFORMER

5-WAY MOUNT TAP SWITCH
FRAME CROSS SECTION : 5" x 6 3/4"

DRAWING NO. R1425
DATE: OCT. 1987

REV-A
10-25-87

BULLETIN
T-4

Transgun/Robot Type Resistance Welding Transformers

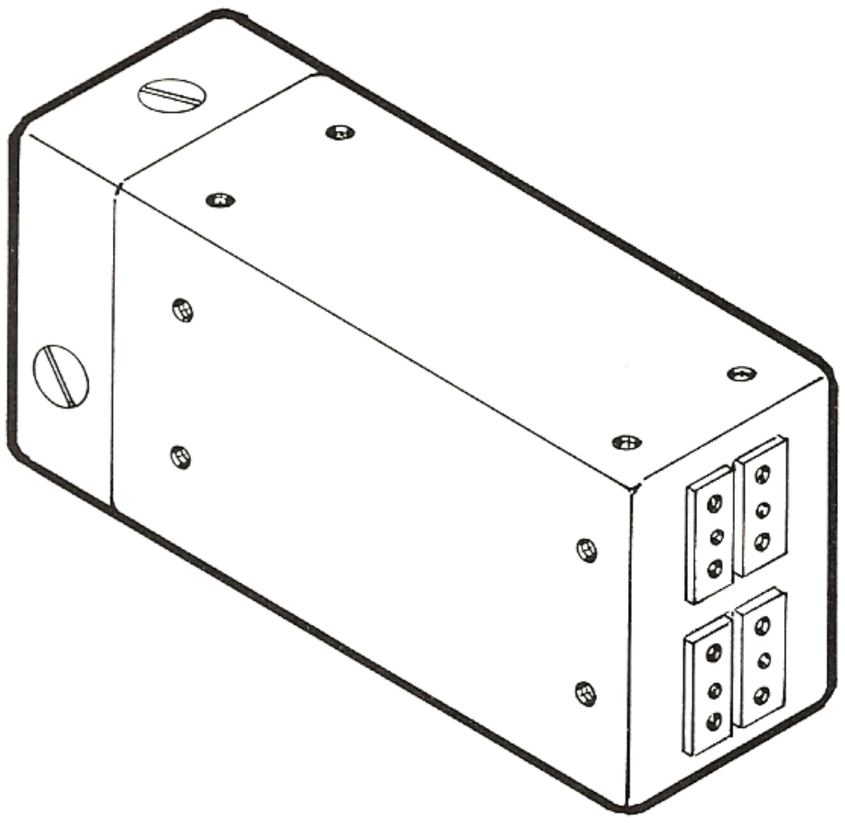

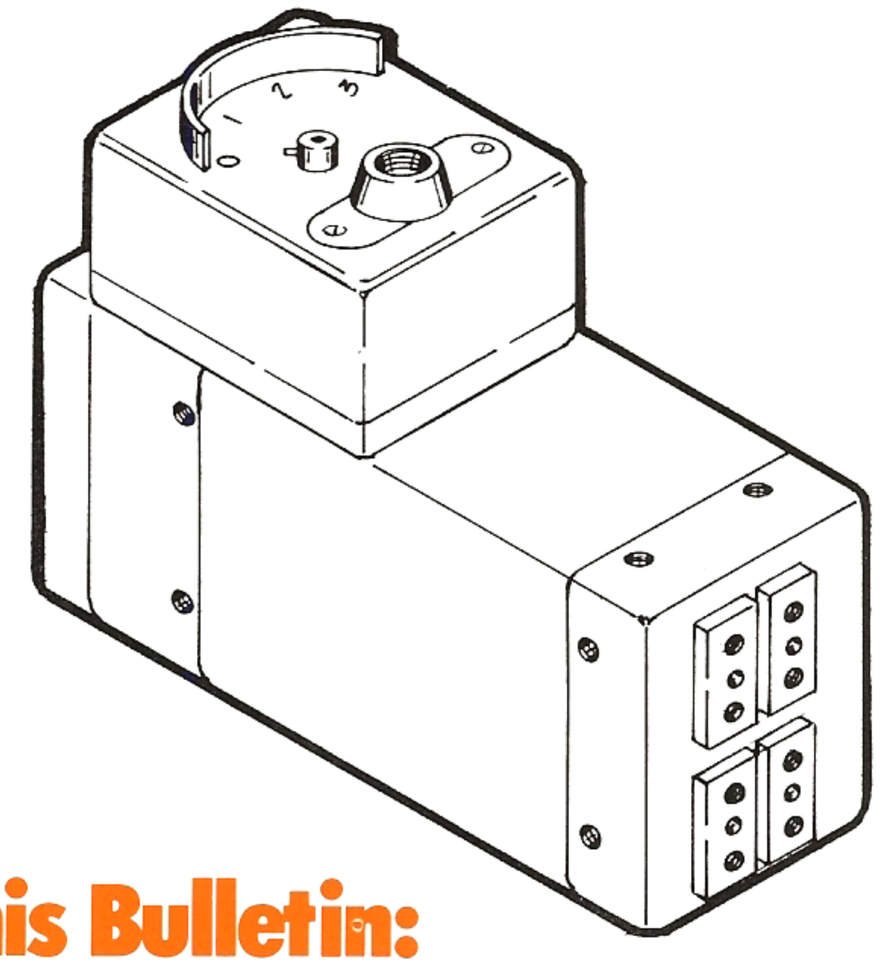

Content Of This Bulletin:

Transgun/Robot Type Transformer
Frame Cross Section 5½" x 6¾"
Wound Core 35 KVA to 80 KVA
Single Secondary Voltage
5-Way Mount Tap Switch

Manufacturing Program

Fixture Type Transformers up to 200 KVA	Request "F" Series Bulletin
Portable Gun Type Transformers up to 200 KVA	Request "G" Series Bulletin
Machine Type Transformers up to 500 KVA	Request "M" Series Bulletin
Transgun/Robot Type Transformers	Request "T" Series Bulletin
Special Products	Request "S" Series Bulletin

RoMan Manufacturing Inc.
861 47th Street, S.W., Grand Rapids, MI 49509 Phone (616) 530-8641 FAX (616) 530-8953

General Description:

- Transgun/Robot Type Transformer
- Wound Core
- Frame Cross Section 5½'' x 6¾''

Ordering Instructions:

- Order by model number shown
- Specify tap switch position on 5-Way Mount Models

SINGLE SECONDARY VOLTAGE MODELS

KVA RATING	SECONDARY VOLTAGE	IMPEDANCE REFERRED TO SECONDARY IN MICRO OHMS		MODEL NUMBER 460V/60 Hz	WEIGHT (LBS)	DWG. NO.	FRAME LETTER
		POLAR	RECTANGULAR				
35	Parallel 3.44 Series 6.88	Parallel 34.7 /37.3° Series* 139 /37.3°	Parallel 27.6 + j 21 Series* 110.4 + j 84	T46635GA1KTWX	67	R1820 Page 3	GA
50	Parallel 4.50 Series 9.00	Parallel 40.5 /36.4° Series* 162 /36.4°	Parallel 32.6 + j 24 Series* 130.4 + j 96	T46650GB1KTWX	82	R1820 Page 3	GB
65	Parallel 5.67 Series 11.34	Parallel 44.8 /35.8° Series* 179.2 /35.8°	Parallel 36.4 + j 26.2 Series* 145.6 + j 104.8	T46665GC1KTWX	100	R1820 Page 3	GC
80	Parallel 6.97 Series 13.94	Parallel 50 /35° Series* 200 /35°	Parallel 40.9 + j 28.7 Series* 163.6 + j 114.8	T46680GD1KTWX	114	R1820 Page 3	GD

*Does not include impedance of series bar

5-WAY MOUNT TAP SWITCH MODELS

KVA RATING	SECONDARY VOLTAGE			IMPEDANCE REFERRED TO SECONDARY IN MICRO OHMS		MODEL NUMBER 460V/60 Hz	WEIGHT (LBS)	DWG. NO.	FRAME LETTER
	1	2	3	POLAR	RECTANGULAR				
35	2.96	3.19	3.43	38.0 /36.4°	30.4 + j 22.9	T46635GA1DTWX	74	R1803 Page 4	GA
50	4.00	4.29	4.50	44.6 /33.9°	37.0 + j 24.9	T46650GB1DTWX	89	R1803 Page 4	GB
65	5.00	5.34	5.75	49.8 /34.4°	41.1 + j 28.1	T46665GC1DTWX	107	R1803 Page 4	GC
80	6.30	6.76	7.08	55.7 /36.1°	45.0 + j 32.8	T46680GD1DTWX	121	R1803 Page 4	GD

Impedance on Tap 3 and secondaries connected in Parallel

Standard Features:

- Class ''F'' insulation
- Fully potted construction
- Interchangable with other manufactures
- Thermostat on Single Secondary Voltage Models

Optional Features:

- Voltages and frquencies other than shown available on request
- Thermostat on 5-Way Tap Switch Models
- Special secondary pads
- Primary disconnect plug (Amphenol)
- Primary power service cable to automotive standards
- Metric threads
- Secondary shunt adaptors and series bar

FRAME LETTER	DIM "A"	DIM "B"
GA	12.50	7.00
GB	14.50	9.00
GC	16.50	11.00
GD	18.50	13.00

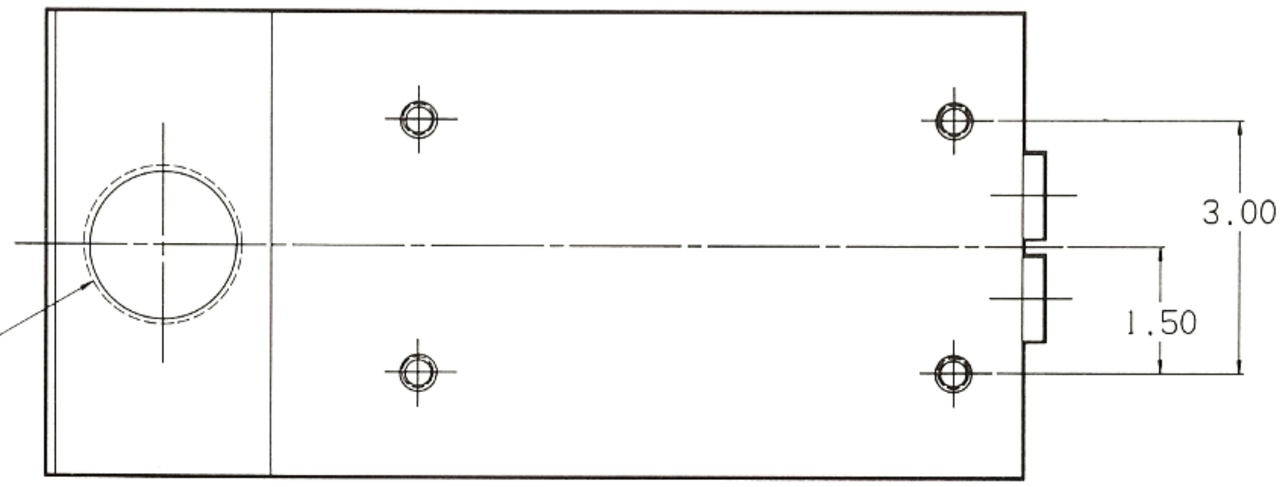

·1 1/4 N.P.T. PRIMARY OPENING (3) PLACES. HOUSING CAN BE ROTATED 180° TO ACHIEVE ALL POSITIONS SHOWN. (2) PLUGS ARE FURNISHED. 1 1/2 N.P.T. PRIMARY OPENING ALSO AVAILABLE.

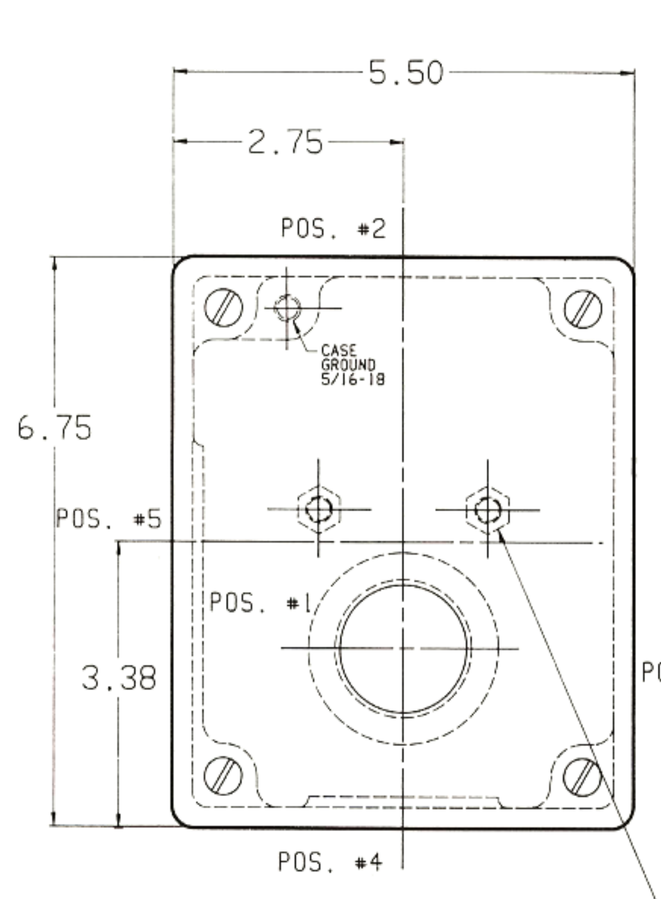

PRIMARY CONNECTION 5/16-18

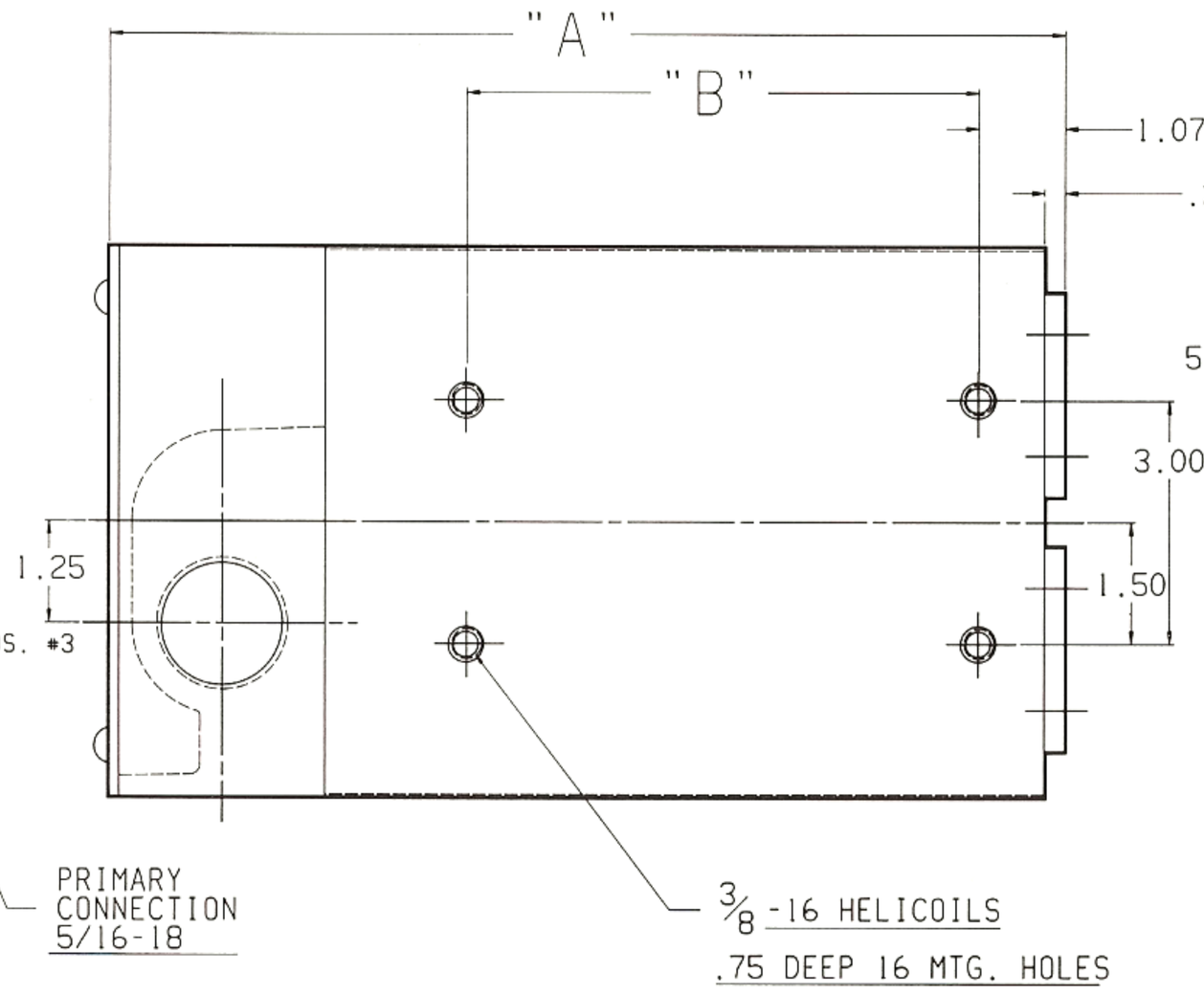

3/8 -16 HELICOILS .75 DEEP 16 MTG. HOLES

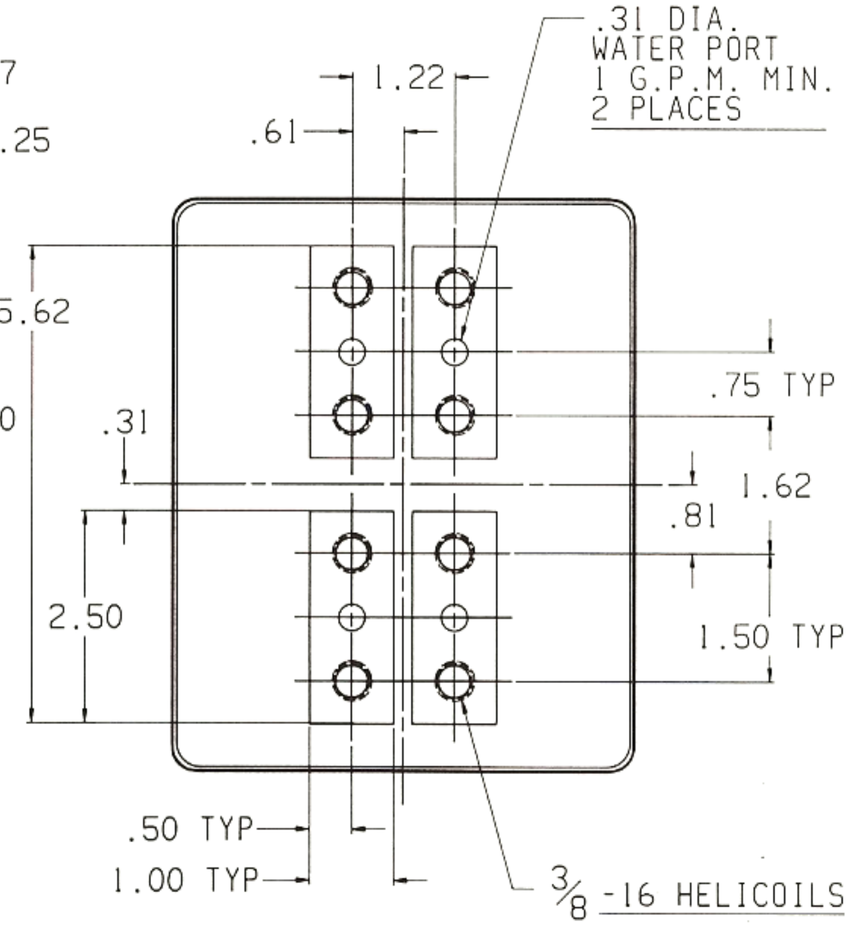

3/8 -16 HELICOILS .62 DEEP 8 HOLES

RoMan Manufacturing Inc.

TRANSGUN/ROBOT TRANSFORMER

FRAME CROSS SECTION : 5 1/2" x 6 3/4"

DRAWING NO. R1820
DATE: OCT. 1987

FRAME LETTER	DIM "A"	DIM "B"	DIM "C"
GA	14.75	7.25	11.50
GB	16.25	8.75	13.00
GC	18.25	10.75	15.00
GD	20.75	13.25	17.50

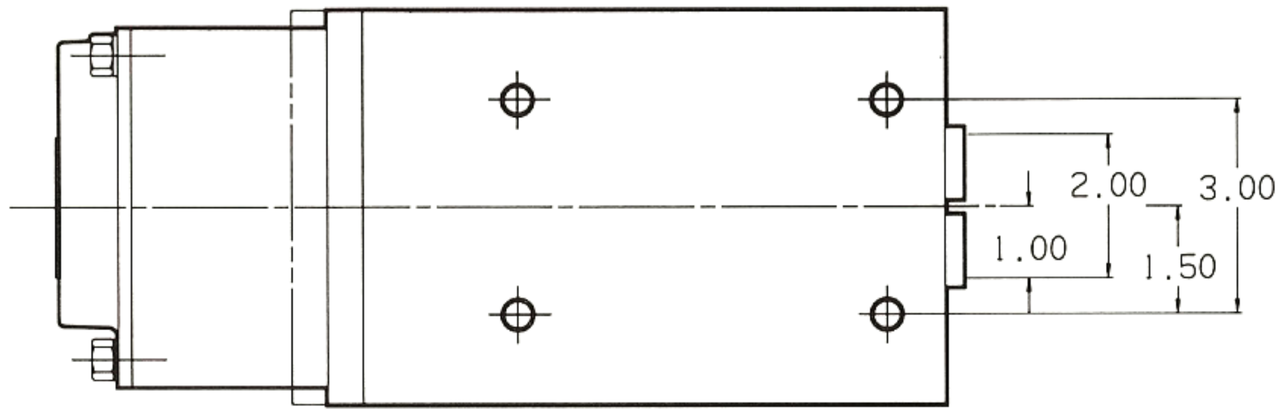

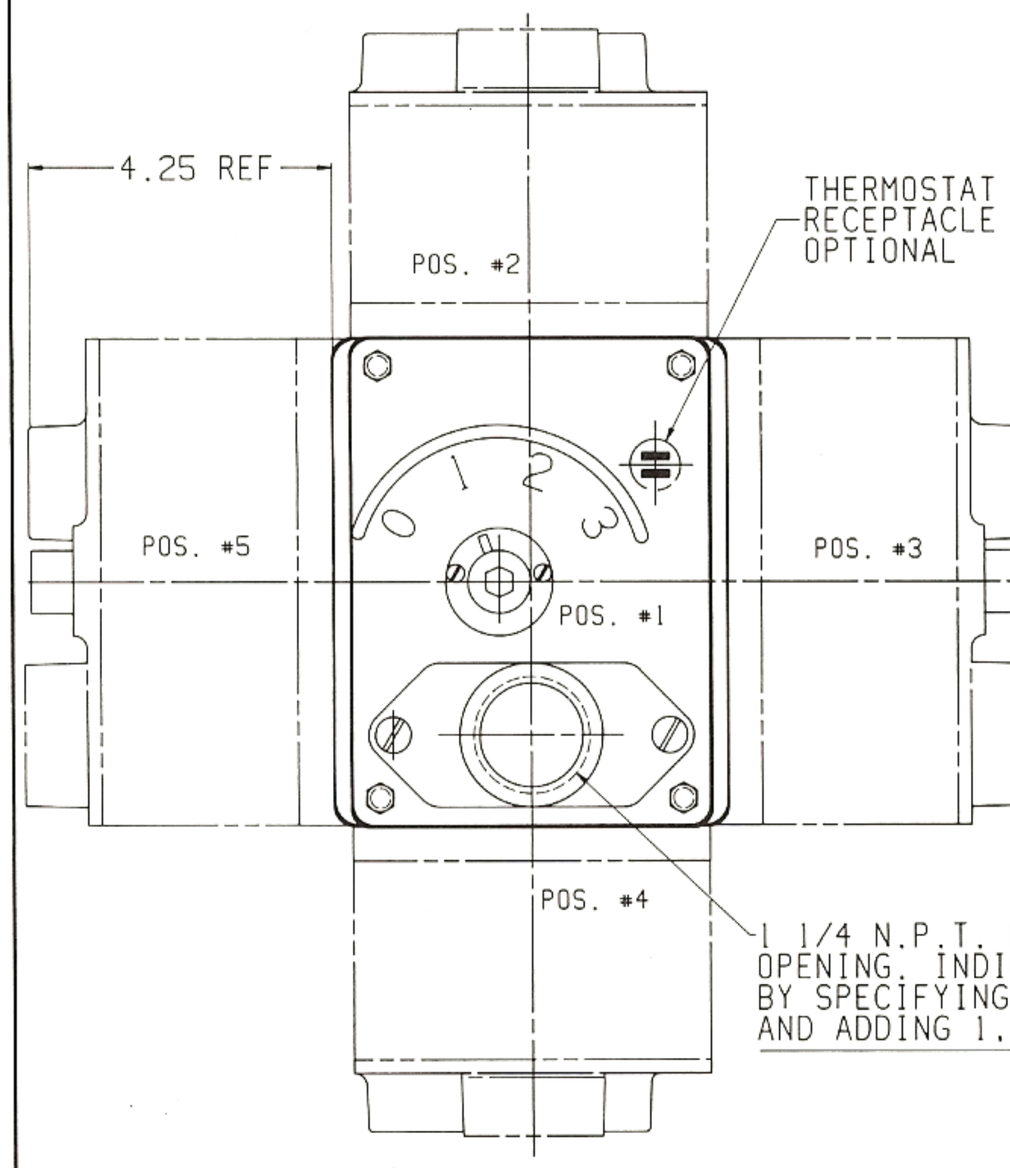

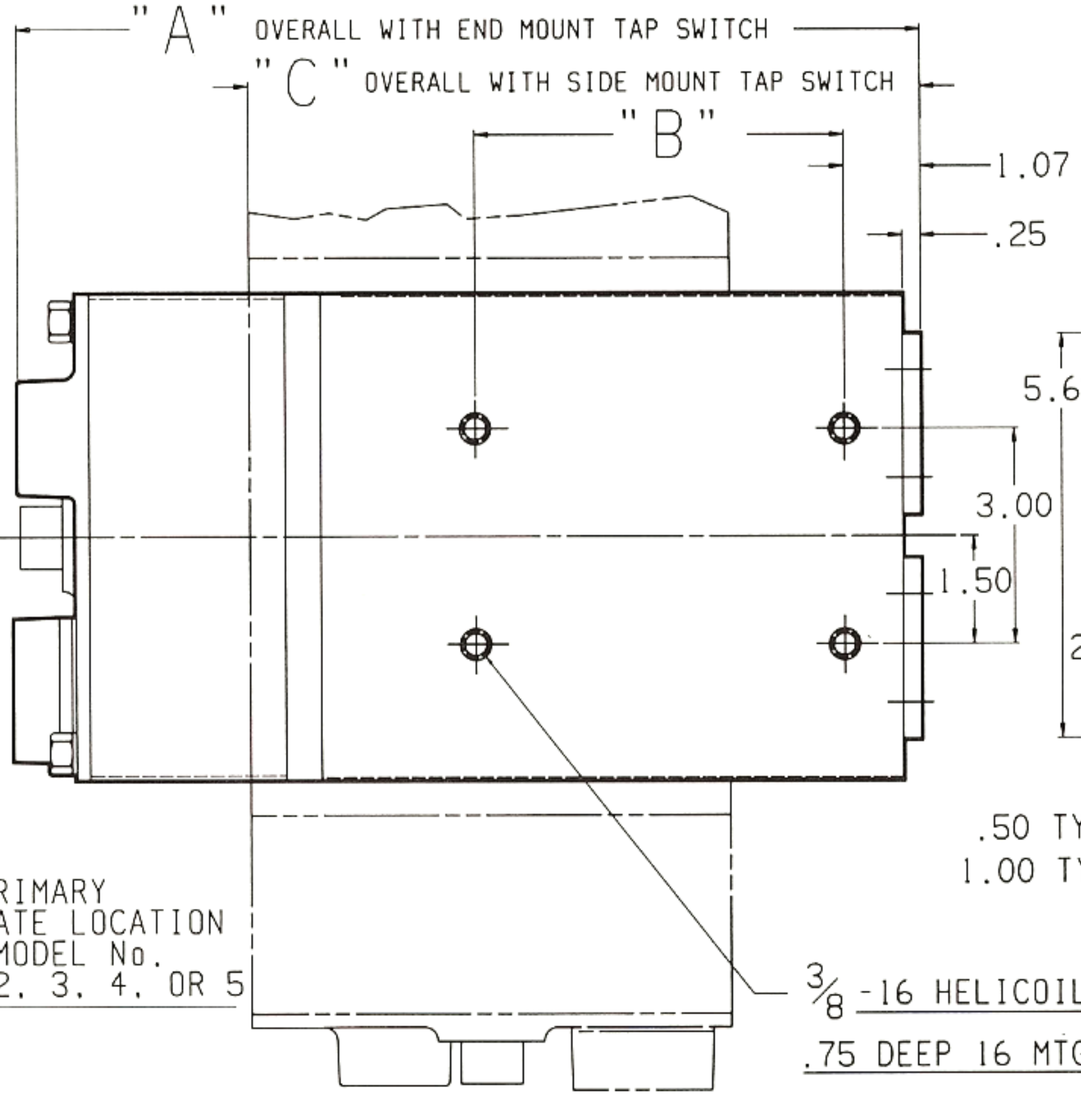

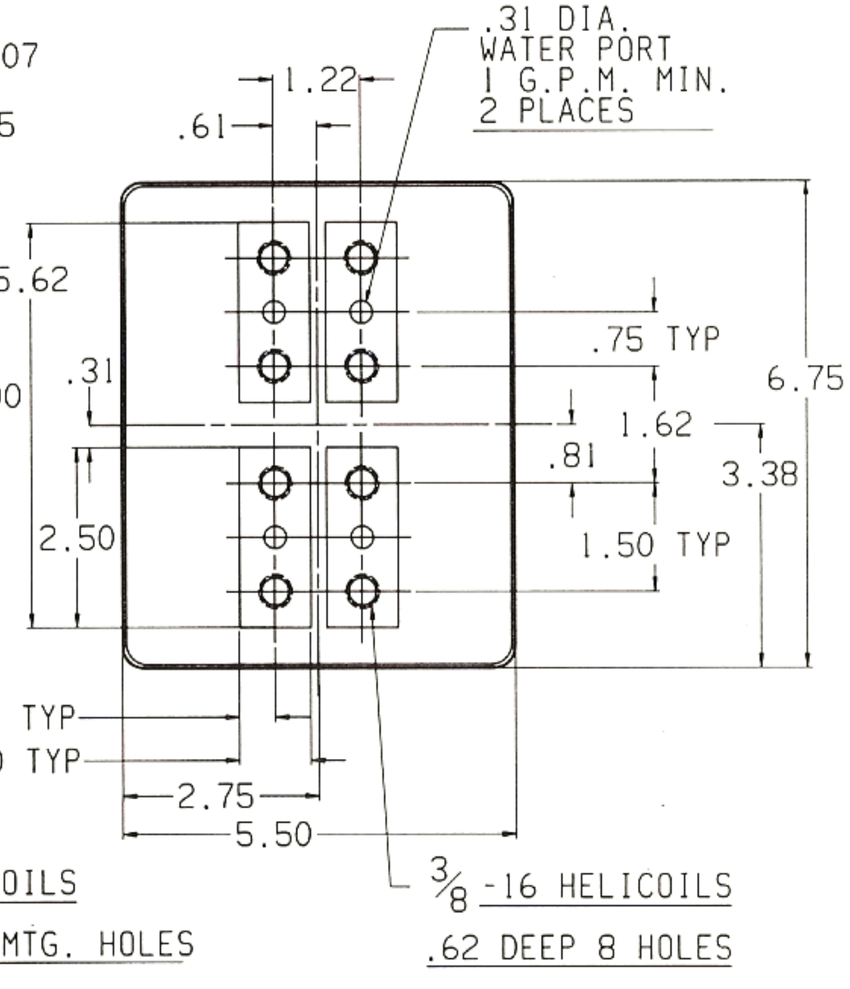

RoMan Manufacturing Inc.

TRANSGUN/ROBOT TRANSFORMER

5-WAY MOUNT TAP SWITCH
FRAME CROSS SECTION : 5 1/2" x 6 3/4"

DRAWING NO. R1803
DATE: OCT. 1987

BULLETIN
T-5

Transgun/Robot Type Resistance Welding Transformers

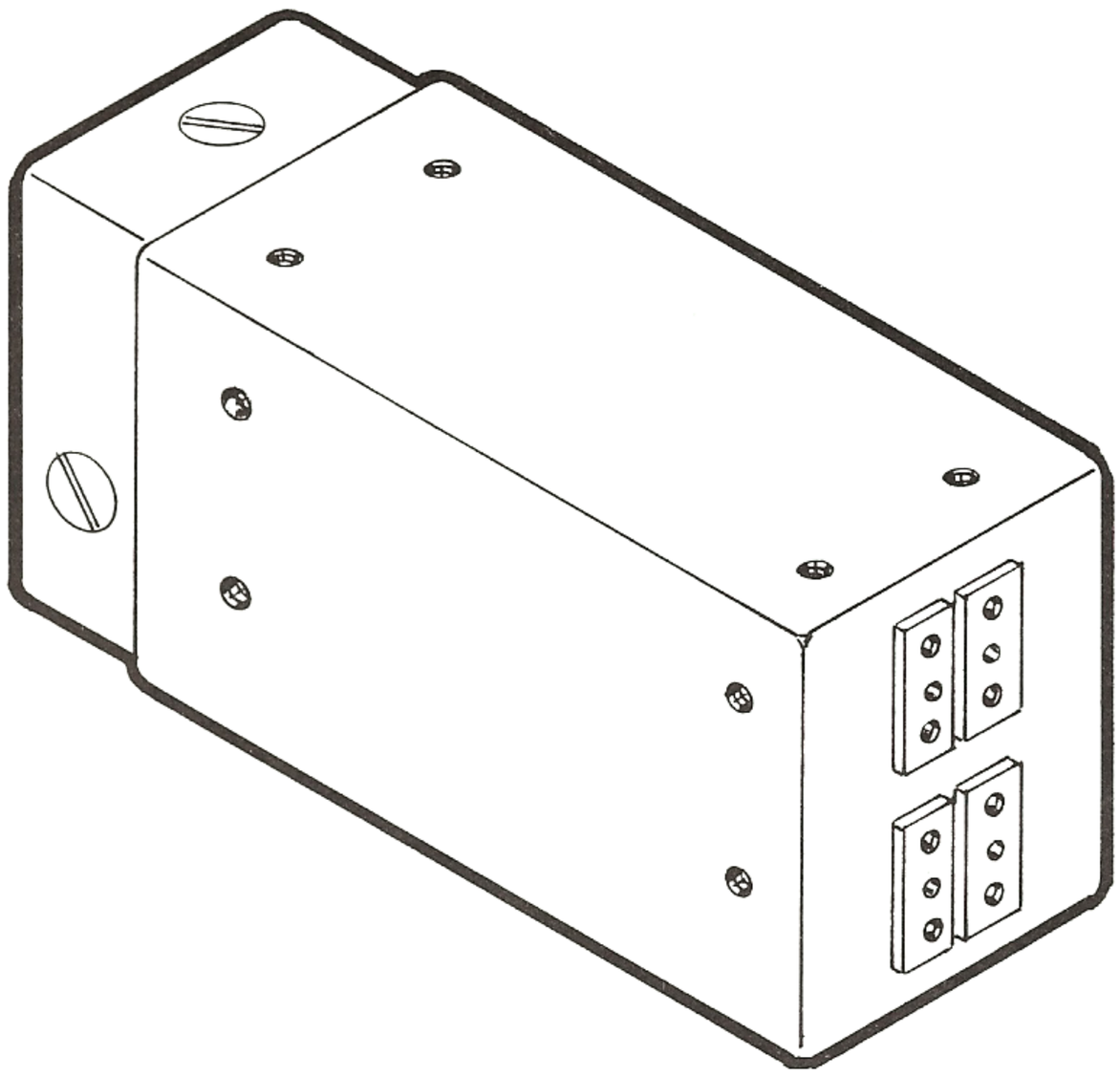

Content Of This Bulletin:

Transgun/Robot Type Transformer
Frame Cross Section 6'' x 6¾''
Wound Core 45 KVA to 80 KVA
Single Secondary Voltage

Manufacturing Program

Fixture Type Transformers up to 200 KVA	Request ''F'' Series Bulletin
Portable Gun Type Transformers up to 200 KVA	Request ''G'' Series Bulletin
Machine Type Transformers up to 500 KVA	Request ''M'' Series Bulletin
Transgun/Robot Type Transformers	Request ''T'' Series Bulletin
Special Products	Request ''S'' Series Bulletin

RoMan
Manufacturing Inc.
861 47th Street, S.W., Grand Rapids, MI 49509 Phone (616) 530-8641 FAX (616) 530-8953

General Description:

- Transgun/Robot Type Transformer
- Wound Core
- Single Secondary Voltage
- Frame Cross Section 6'' x 6¾''

Ordering Instructions:

- Order by model number shown

KVA RATING	SECONDARY VOLTAGE	IMPEDANCE REFERRED TO SECONDARY IN MICRO OHMS		MODEL NUMBER 460V/60 Hz	WEIGHT (LBS)	DWG. NO.	FRAME LETTER
		POLAR	RECTANGULAR				
45	Parallel 3.43 Series 6.86	Parallel 30.4 /37.3° Series* 121.6 /37.3°	Parallel 23.8 + j 18.8 Series* 95.2 + j 75.2	T46645HA1KTWX	74	R1821 Page 3	**HA**
60	Parallel 4.25 Series 8.50	Parallel 35.9 /36.4° Series* 143.6 /36.4°	Parallel 27.3 + j 23.2 Series* 109.2 + j 92.8	T46660HB1KTWX	88	R1821 Page 3	**HB**
70	Parallel 5.22 Series 10.44	Parallel 38.4 /35.8° Series* 153.6 /35.8°	Parallel 30 + j 24 Series* 120 + j 96	T46670HC1KTWX	100	R1821 Page 3	**HC**
80	Parallel 6.05 Series 12.10	Parallel 42.2 /35° Series* 168.8 /35°	Parallel 32.2 + j 27.3 Series* 128.8 + j 109.2	T46680HD1KTWX	114	R1821 Page 3	**HD**

*Does not include impedance of series bar

Standard Features:

- Class ''F'' insulation
- Fully potted construction
- Inter changable with other manufactures
- Thermostat

Optional Features:

- Voltages and frequencies other than shown available on request
- Special secondary pads
- Primary disconnect plug (Amphenol)
- Primary power service cable to automotive standards
- Secondary shunt adaptors and series bar
- Metric Threads

FRAME LETTER	DIM "A"	DIM "B"
HA	12.50	7.00
HB	14.00	8.50
HC	15.50	10.00
HD	17.00	11.50

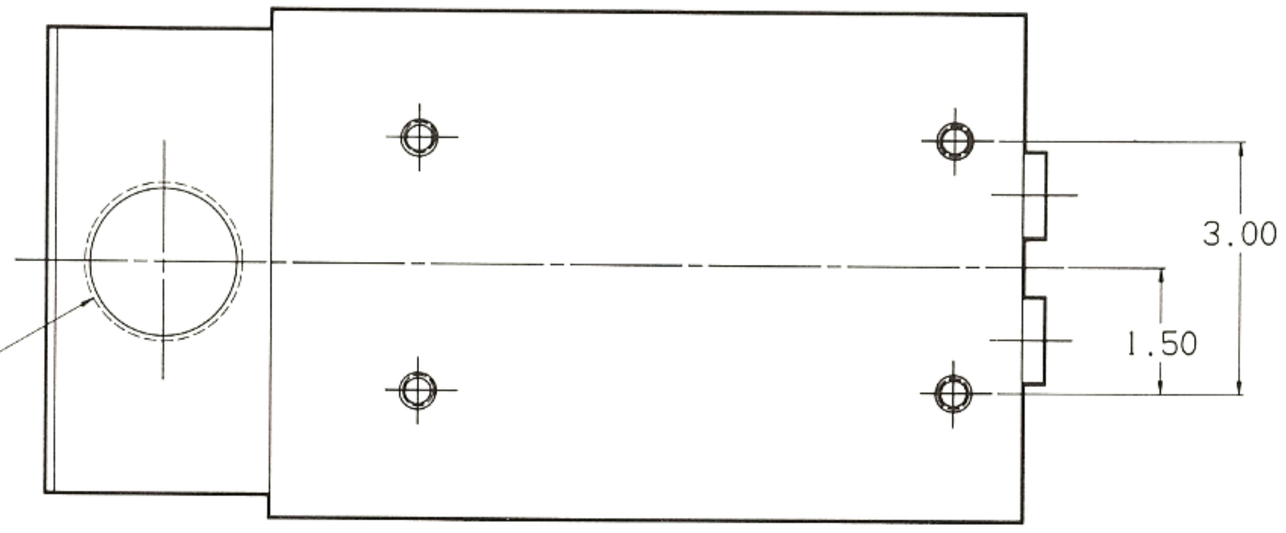

1 1/4 N.P.T. PRIMARY OPENING (3) PLACES. HOUSING CAN BE ROTATED 180° TO ACHIEVE ALL POSITIONS SHOWN. (2) PLUGS ARE FURNISHED. 1 1/2 N.P.T. PRIMARY OPENING ALSO AVAILABLE.

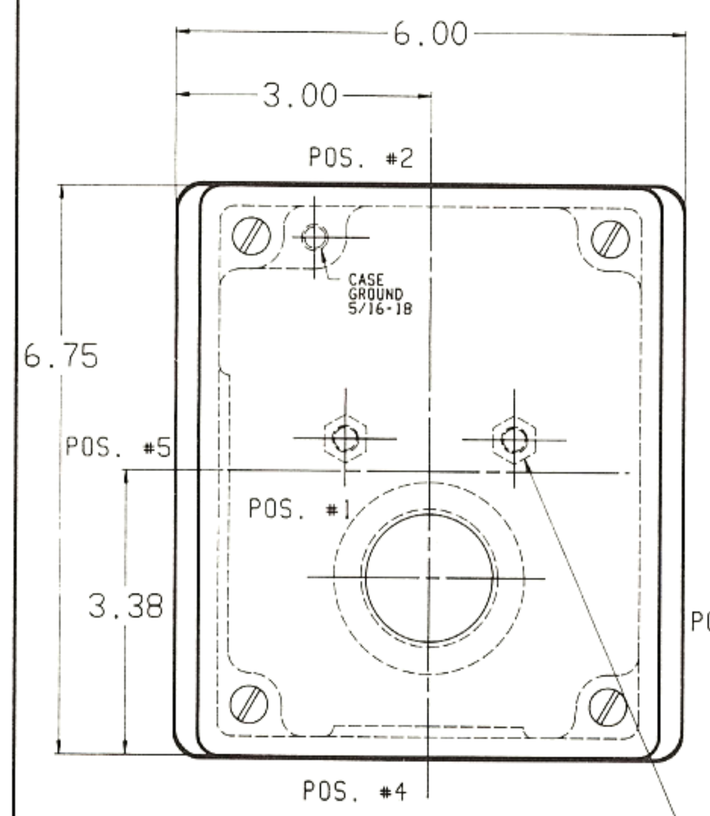

PRIMARY CONNECTION 5/16-18

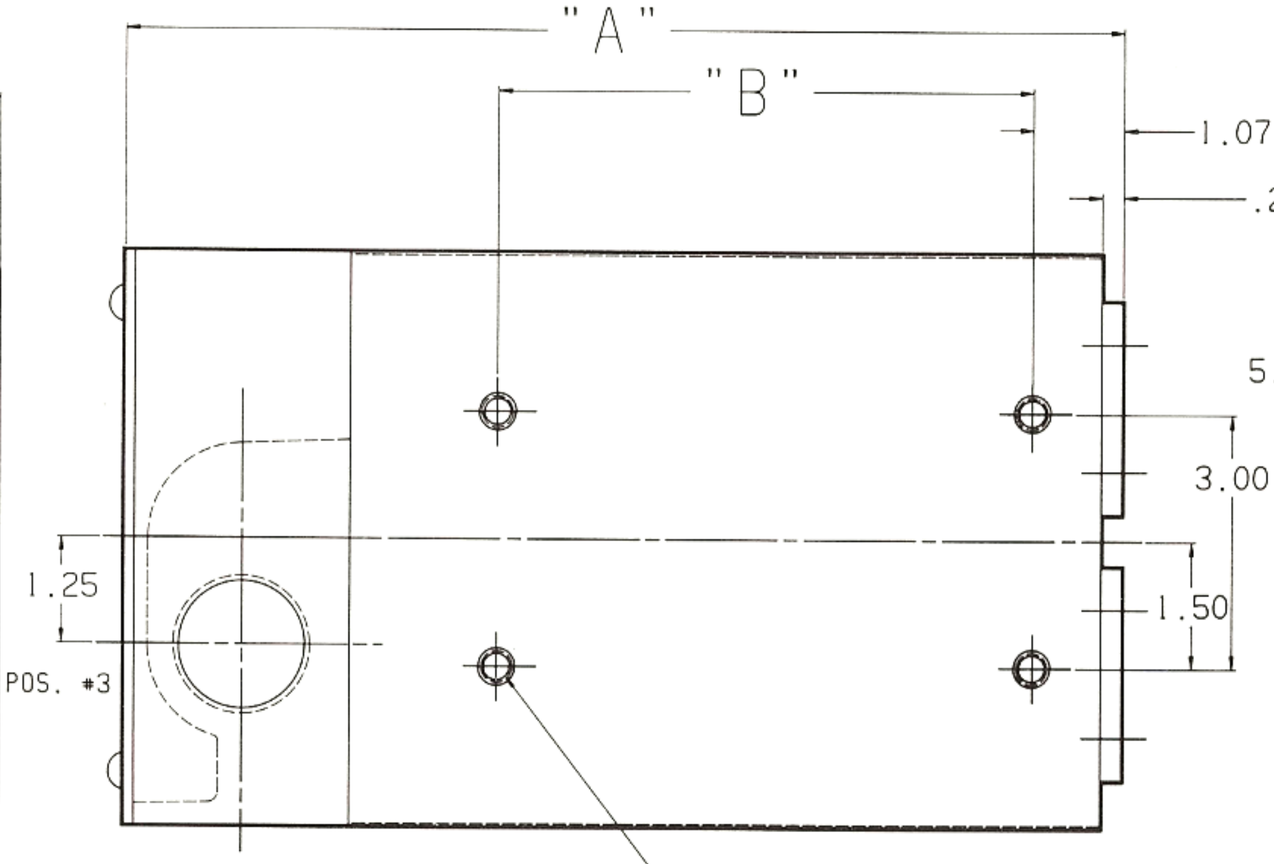

3/8 -16 HELICOILS .75 DEEP 16 MTG. HOLES

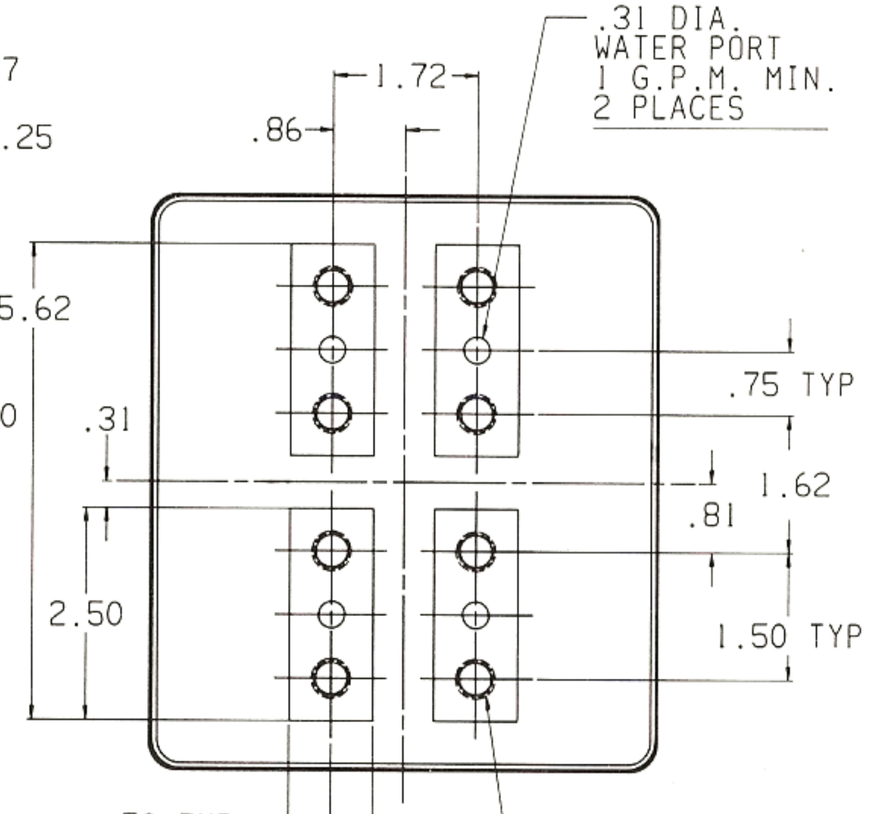

3/8 -16 HELICOILS .62 DEEP 8 HOLES

RoMan Manufacturing Inc.

TRANSGUN/ROBOT TRANSFORMER

FRAME CROSS SECTION : 6" x 6 3/4"

DRAWING NO. R1821
DATE: OCT. 1987

Special Products

RoMan

Manufacturing Inc.

861 47th Street, S.W., Grand Rapids, MI 49509 (616) 530-8641

Special Products

Special Products Index

DESCRIPTION	BULLETIN
DC Power Supplies, Special Transformers Frequency Convertor Transformers	S-1
100 and 200 Ampere Spring-Detent-Positioning Tap Switches 200 Ampere Disconnect Plugs	S-2
Panel Mount Tap Switch	S-2.1
Grounding Reactors	S-3
Impedance Meter	S-4
Weld Current Equalizer	S-5

BULLETIN S-1

Special Products

DC Powersupplies, Special Transformers Frequency Convertor Transformers

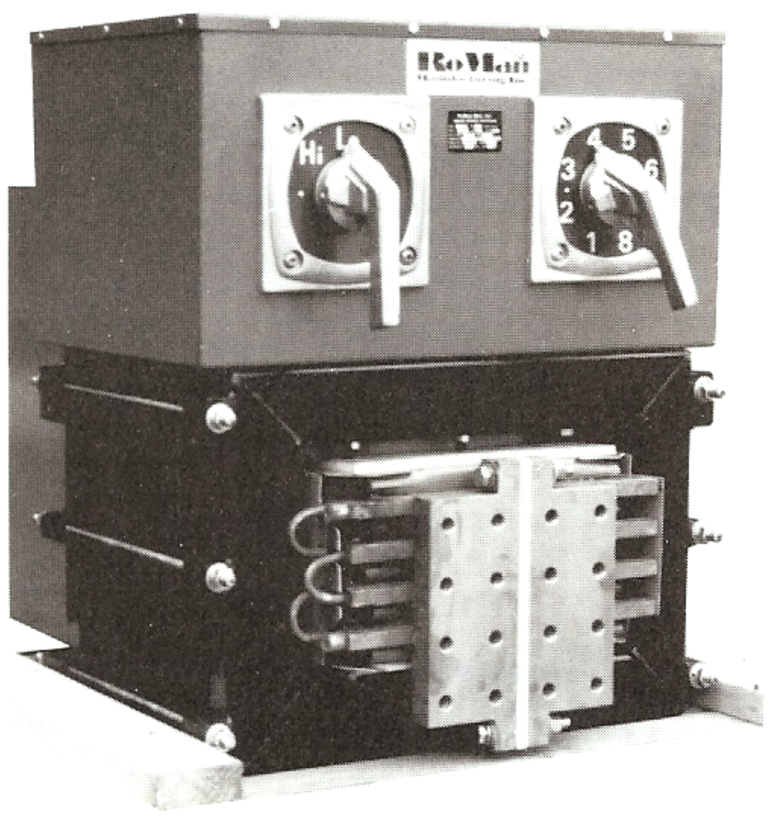

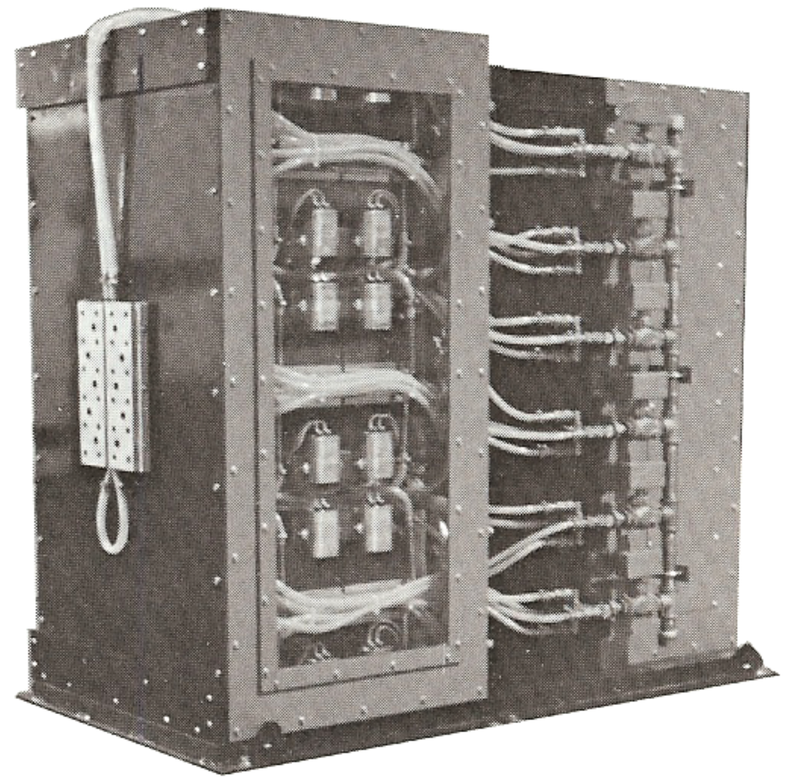

Now you, too, can benefit from Roman's decades of experience. This bulletin shows a small sample of special products designed and built by Roman Manufacturing, Inc. These products have been engineered especially for the resistance welding industry and other fields requiring magnetic components with similar output characteristics.

Manufacturing Program

Fixture Type Transformers up to 200 KVA	Request "F" Series Bulletin
Portable Gun Type Transformers up to 200 KVA	Request "G" Series Bulletin
Machine Type Transformers up to 500 KVA	Request "M" Series Bulletin
Transgun/Robot Type Transformers	Request "T" Series Bulletin
Special Products	Request "S" Series Bulletin

RoMan
Manufacturing Inc.
861 47th Street, S.W., Grand Rapids, MI 49509 (616) 530-8641

Special Resistance Welding Transformers

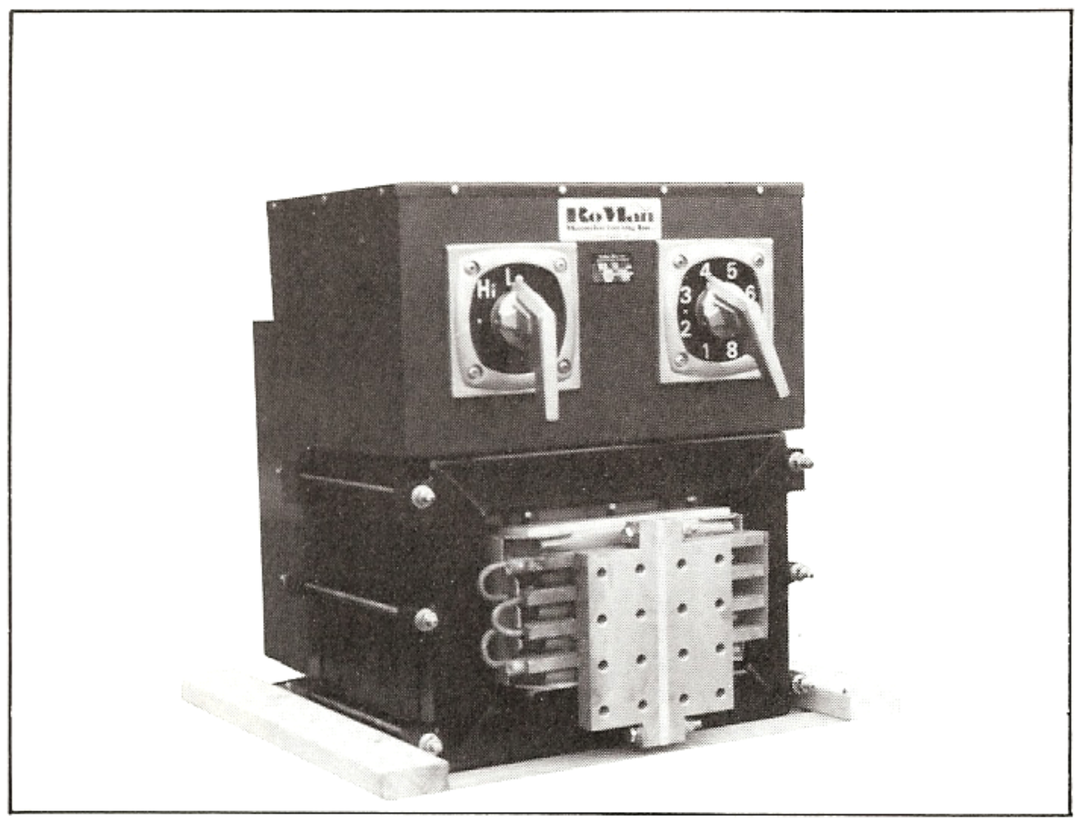

Heavy Duty Machine Type Transformer

Primary Supply 440V, 60 Hz, Single Phase, 350 KVA at 50% Duty Cycle, Secondary Voltage from 5.5 to 13.1 Volts in 16 Steps.

Flash Welding Transformer

Primary Supply 440 Volt, 60 Hz, Single Phase, 600 KVA at 50% Duty Cycle, Secondary Voltage 5.2 to 10.4 Volts in 8 Steps.

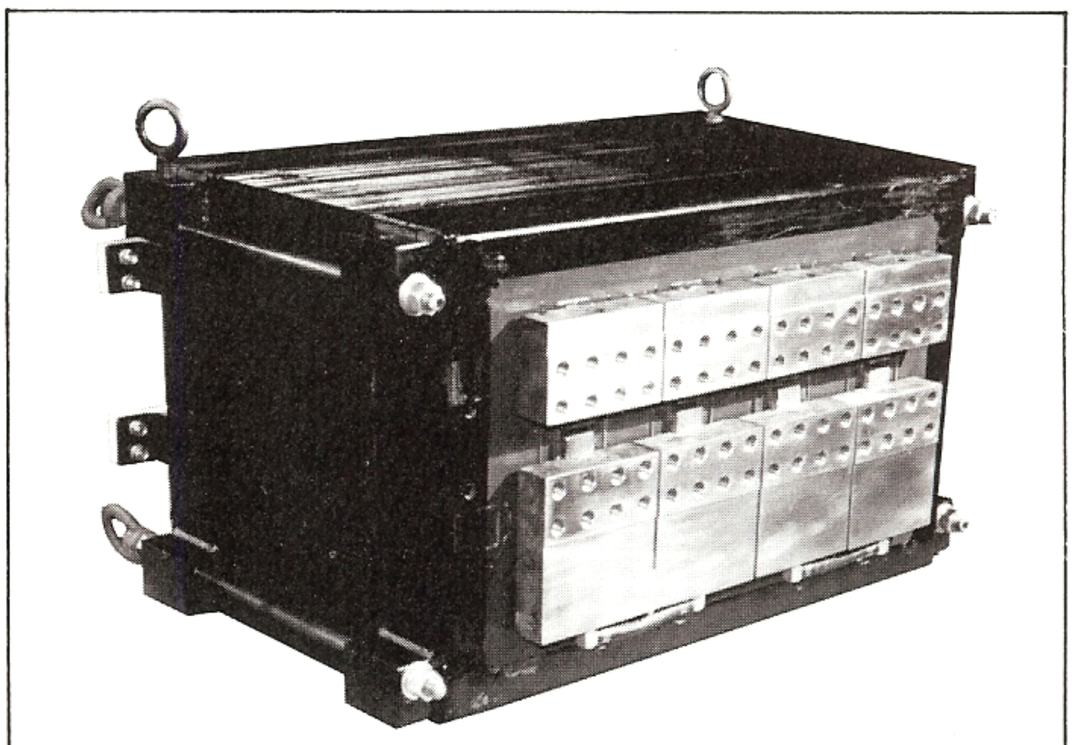

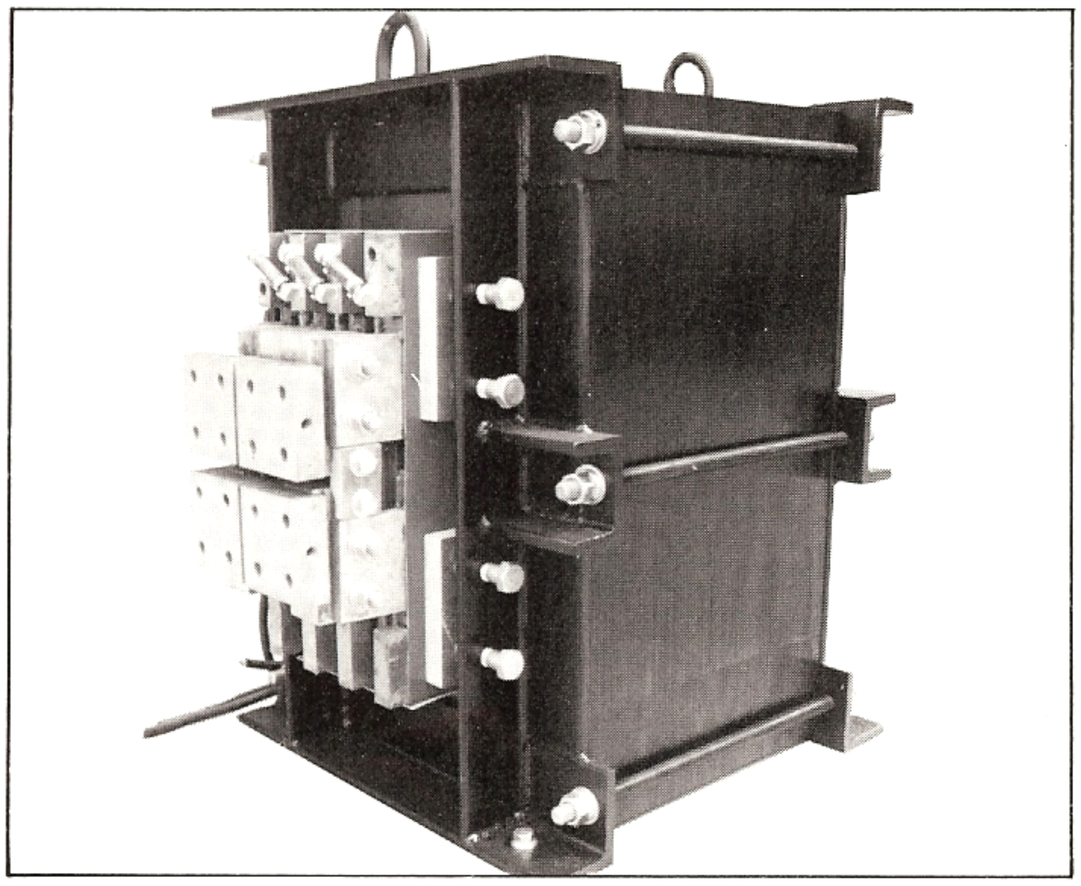

Frequency Converter Transformer

Primary Supply 460 V, 60 Hz, Three Phase, 150 KVA at 50% Duty Cycle, Secondary Voltage 3.5 to 7 Volts.

Rectifier Transformers

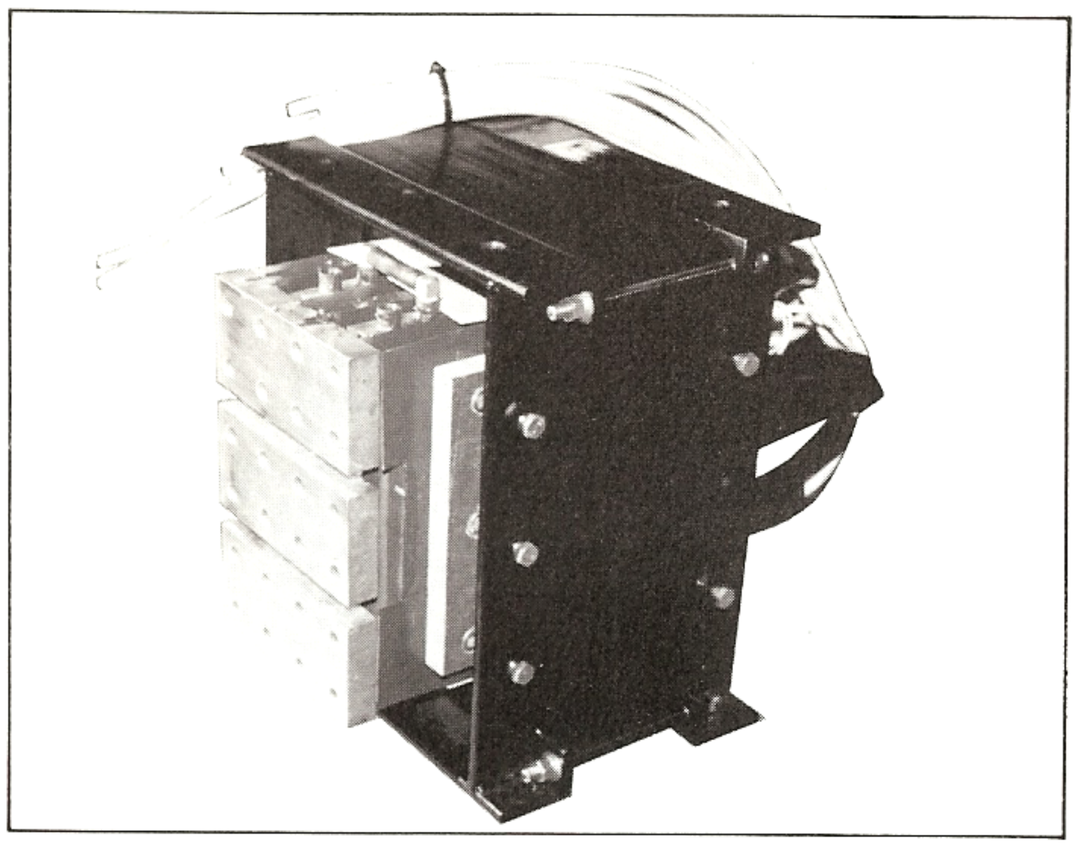

Rectifier Transformer For Seam Welder Application

Primary Supply 460 Volt, 60 Hz, Single Phase, 150 KVA at 50% Duty Cycle, Secondary Voltage (Leg to Neutral) from 3 to 4.8 volts designed for Single Phase Center Tap or 6 Phase Star Rectifier Configeration.

Rectifier Transformer Bank Including Inter Phase Transformer and Collector Bus System

Primary Supply 480 Volt, 60 Hz, Three Phase, 550 KVA at 100% Duty Cycle Water-Cooled. System Designed for Double-Wye with Interphase Rectifier Configeration.

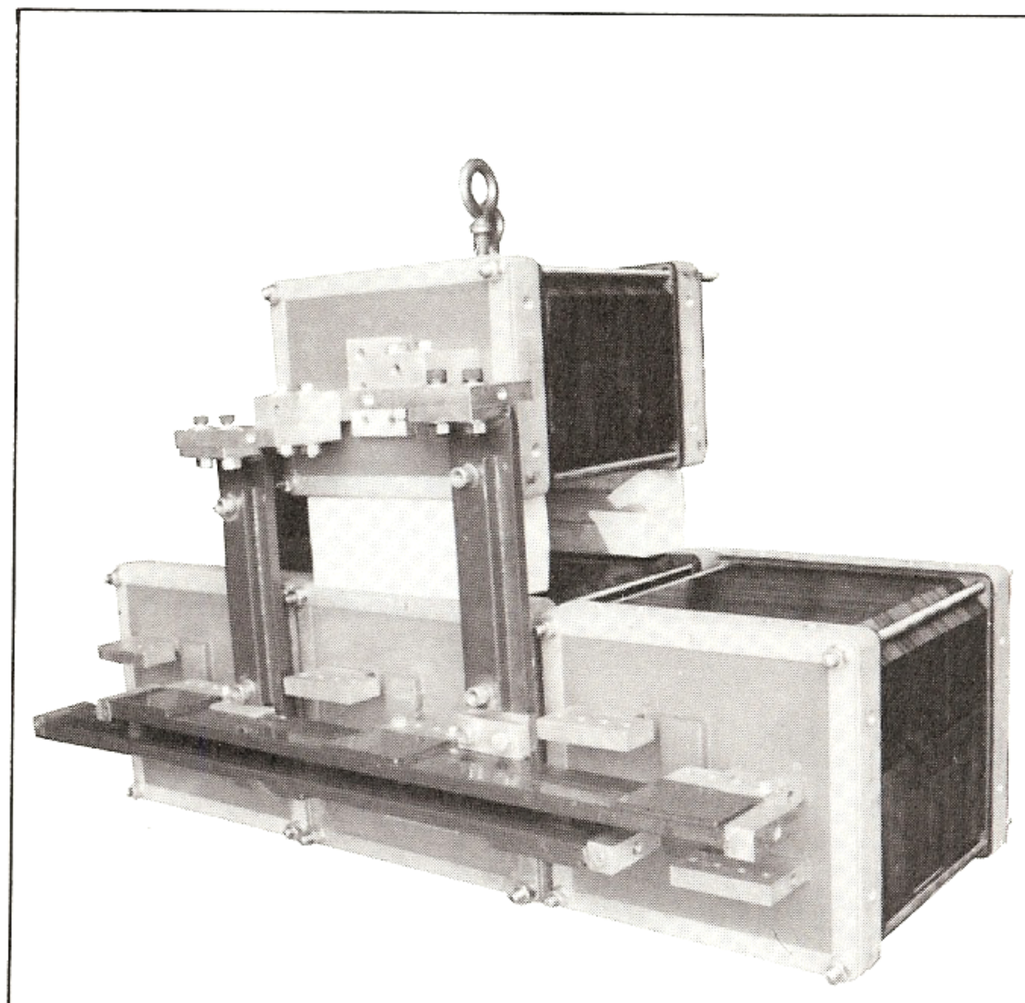

RoMan Manufacturing Inc.

DC Resistance Welding Power Supplies

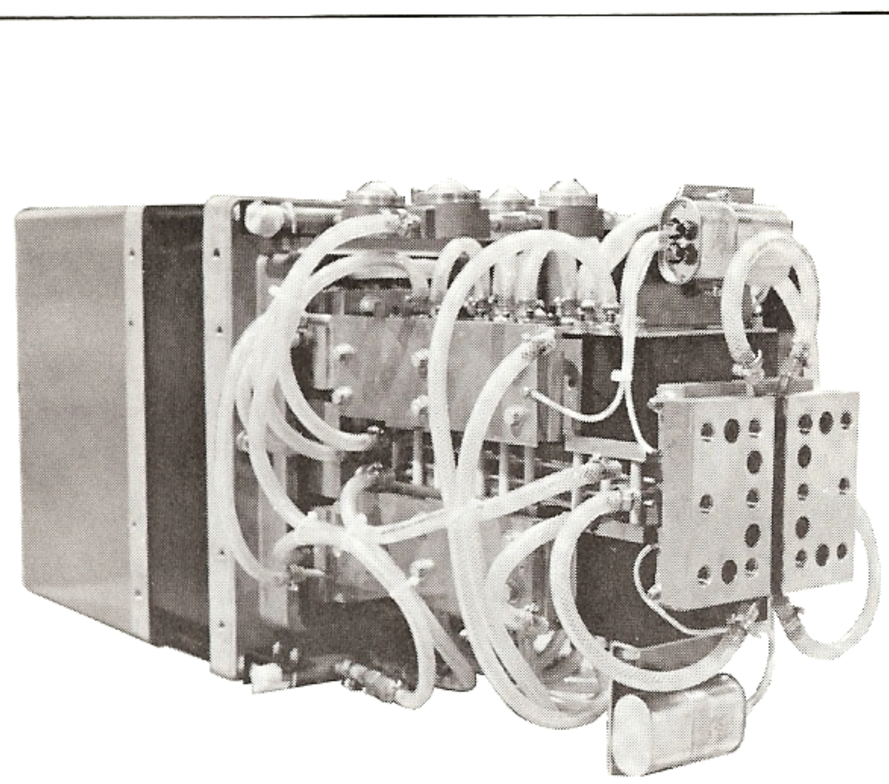

Single Phase DC Resistance Welding Power Supply

Primary Supply 460 Volt, 60 Hz, Single Phase, 200 KVA at 50% DC.
DC Output Voltage (No Load) 4.5 to 8.1 Volts.

Three Phase DC Resistance Welding Power Supply

Primary Supply: 460 Volt, 60 Hz, Three Phase, 1380 KVA at 50% Duty Cycle. DC Output Voltage (No Load) 6 to 10 Volts.

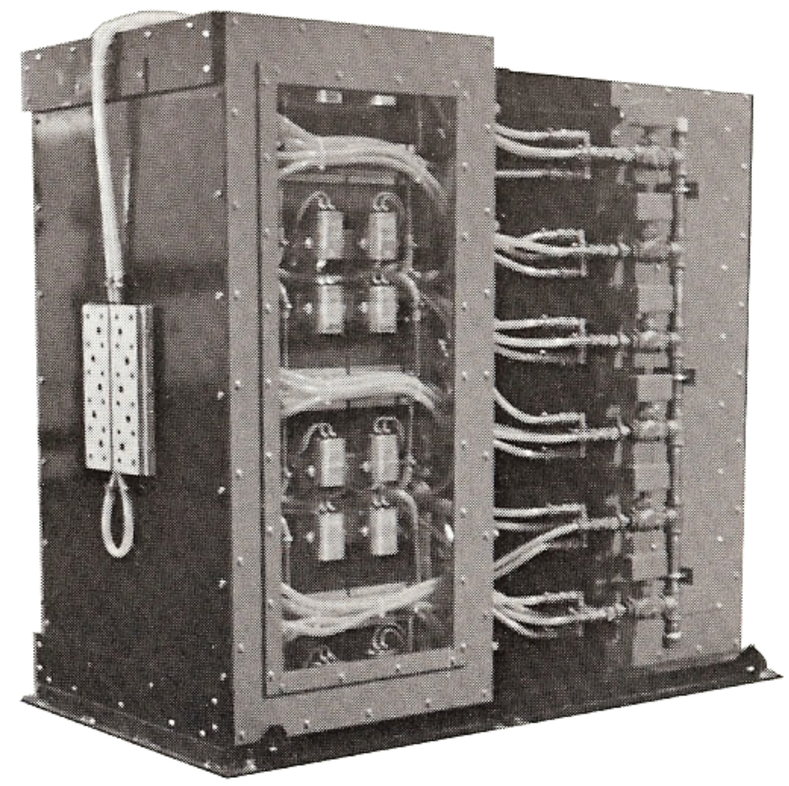

RoMan Manufacturing Inc.
861 47th Street, S.W., Grand Rapids, MI 49509 (616) 530-8641

BULLETIN S-2

Special Products

Spring-Detent-Positioning Tap Switches Disconnect Plugs

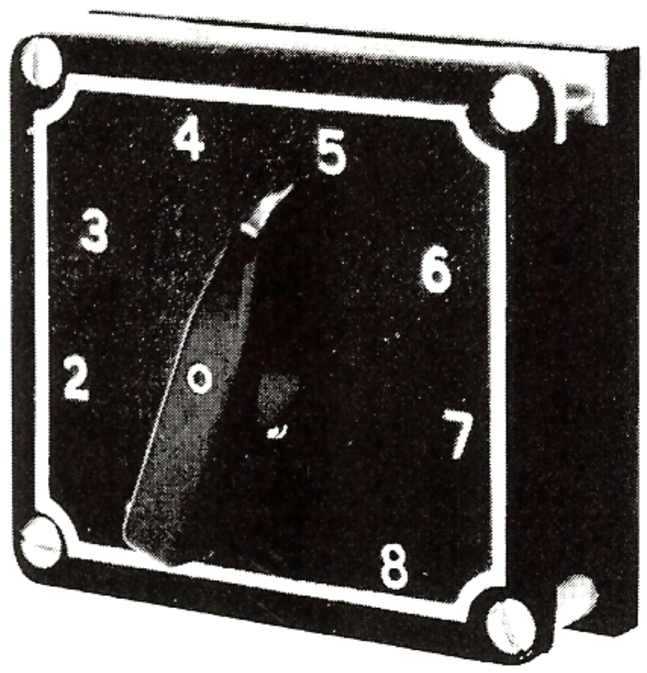

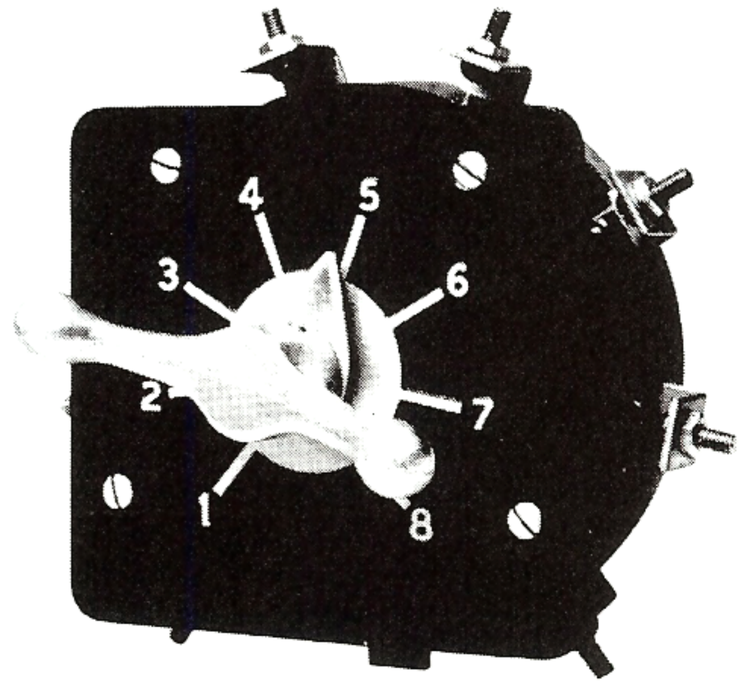

Content Of This Bulletin:

100 and 200 Ampere Type P Open Construction Tap Switches
200 Ampere Type PC Totally Enclosed Tap Switches
200 Ampere Disconnect Plugs for PC Tap Switches

Manufacturing Program

Fixture Type Transformers up to 200 KVA	Request "F" Series Bulletin
Portable Gun Type Transformers up to 200 KVA	Request "G" Series Bulletin
Machine Type Transformers up to 500 KVA	Request "M" Series Bulletin
Transgun/Robot Type Transformers	Request "T" Series Bulletin
Special Products	Request "S" Series Bulletin

RoMan
Manufacturing Inc.
861 47th Street, S.W., Grand Rapids, MI 49509 (616) 530-8641

Type P Spring-Detent-Positioning Tap Switches ... by RoMan

100 AMP - NON-LOAD BREAK — 600 VOLTS AC OR DC

P Series - Type P108

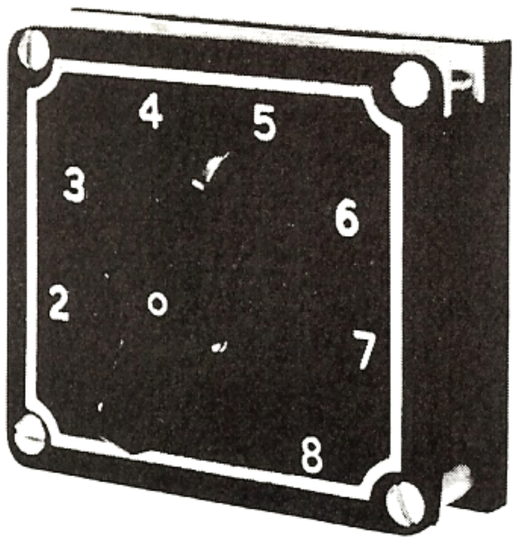

Front View

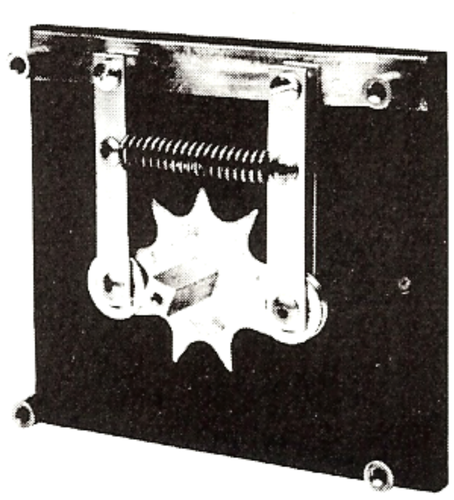

View Shows Spring-Detent

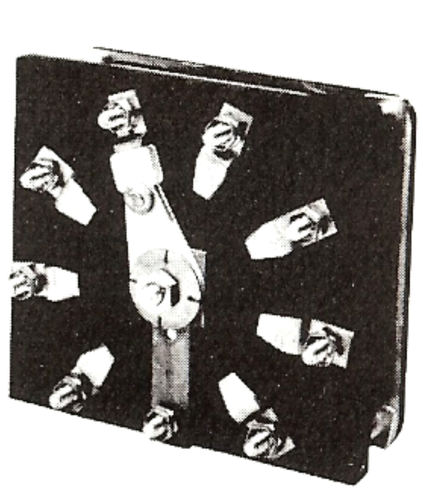

Rear View

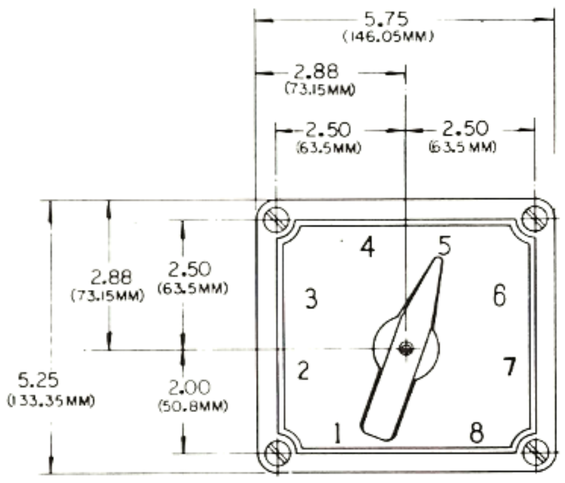

Front View

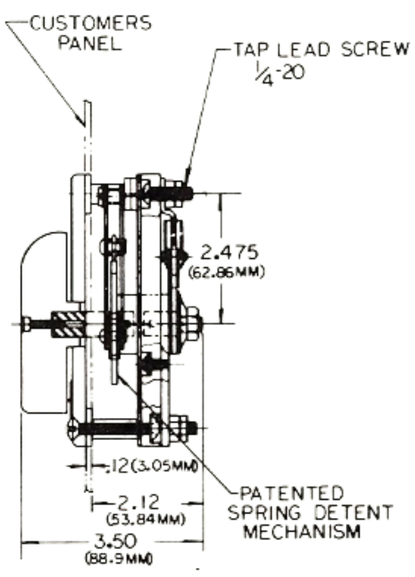

Side View

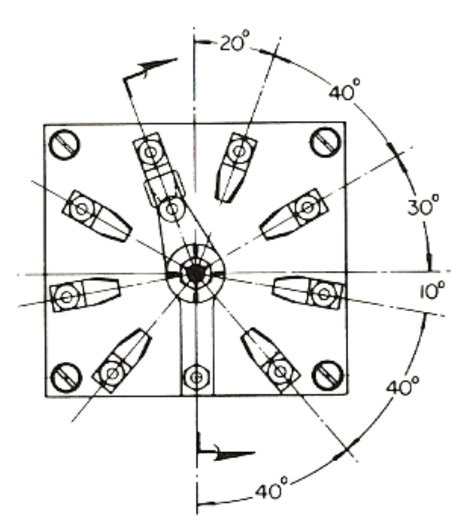

Rear View



Type P101



Type P102



Type P103



Type P104



Type P105



Type P106



Type P107



Type P108 ***This type is illustrated above.***

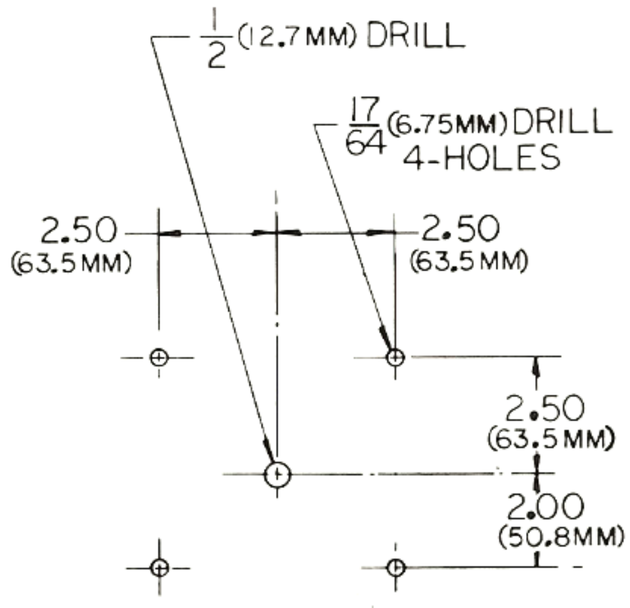

Panel Drilling

Type P tap switches have spring-detent-positioning with indicating front plate and handle. The spring-detent features is a spring assist which results in fast acting, self-positioning selection of taps. The tap switches are designed for dead-front operation for changing taps on various types of resistance welders, rectifiers, transformers, induction heating and electric furnaces, and other applications requiring tap changing capability. They are rated for continuous duty based on a temperature rise not exceeding a 30°C in a 40°C ambient.

200 AMP — NON-LOAD BREAK - 600 VOLTS AC OR DC

P Series - Type P208L

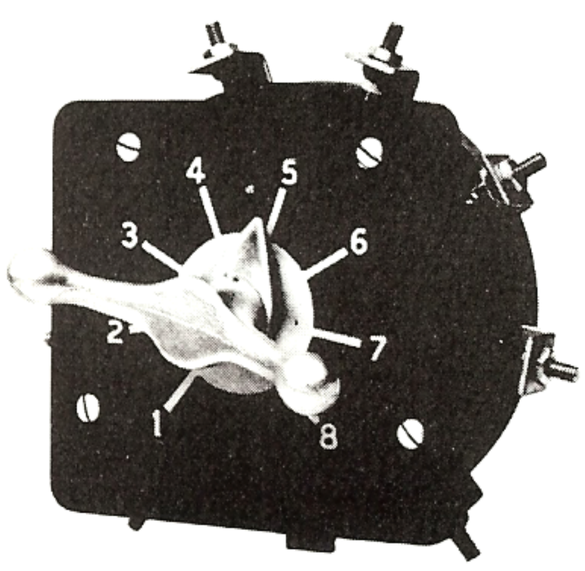

Front View

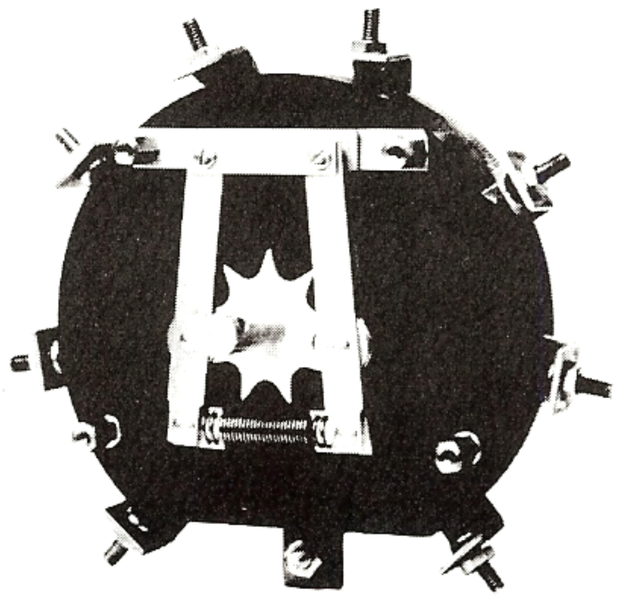

View Shows Spring-Detent

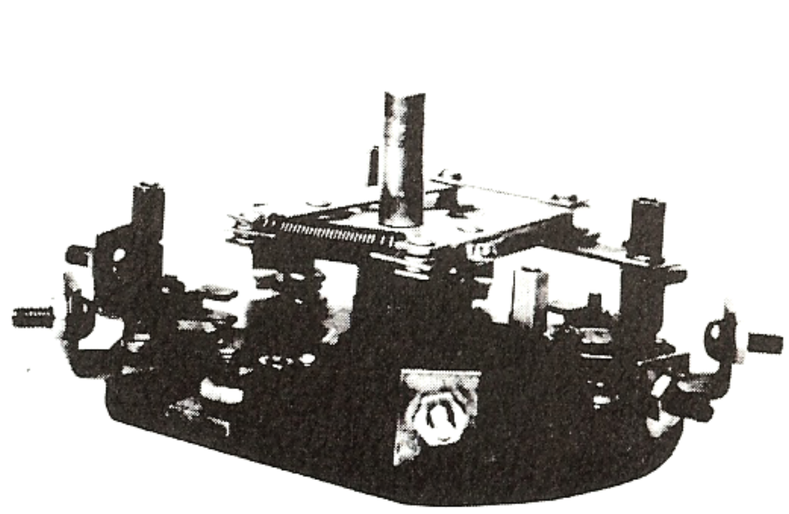

Rear View

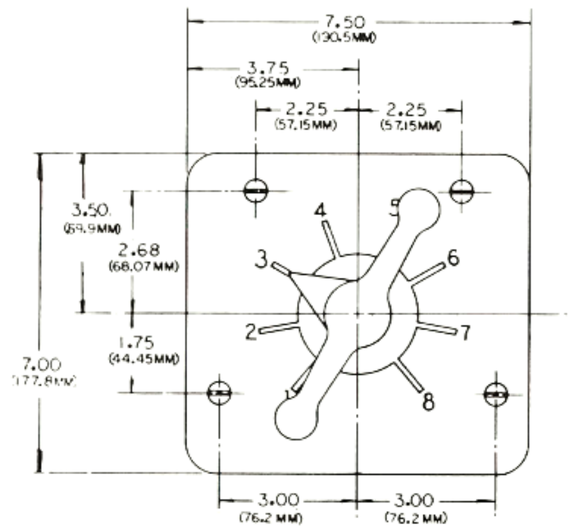

Front View

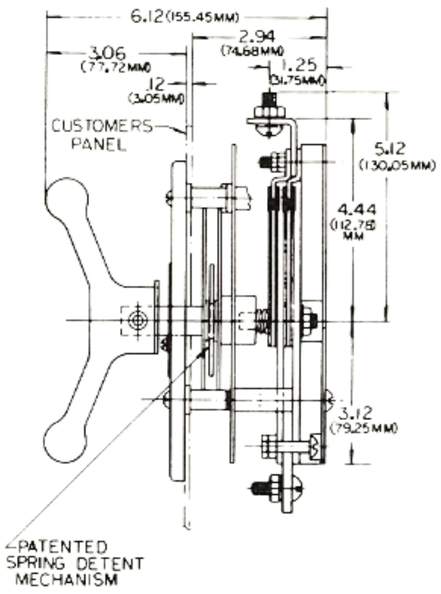

Side View

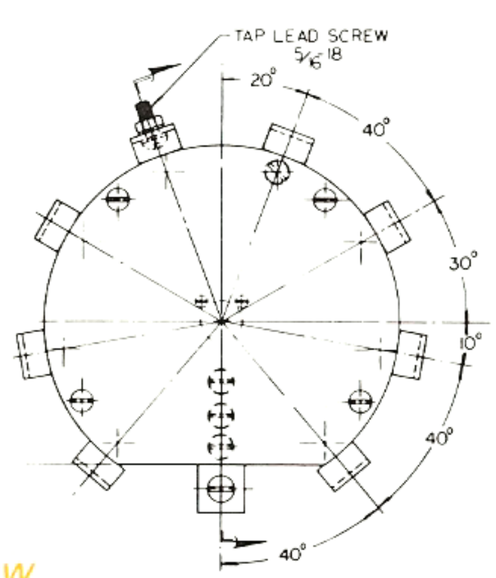

Rear View



Type P202L



Type P203L



Type P204L



Type P205L



Type P206L



Type P207L



Type P208L *This type is illustrated above.*

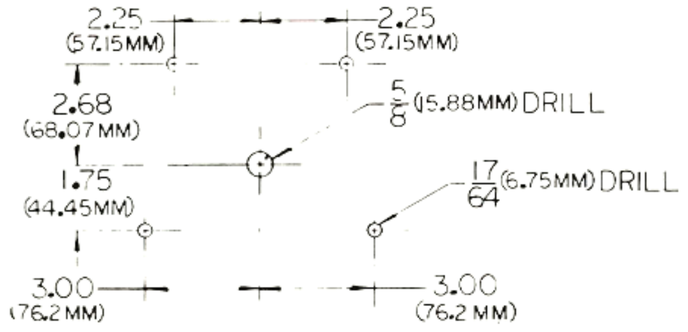

Panel Drilling

200 Amp—Non-Load Break—600 Volts AC or DC
Type PC Totally Enclosed Spring-Detent-Positioning Tap Switches
Disconnect Plugs

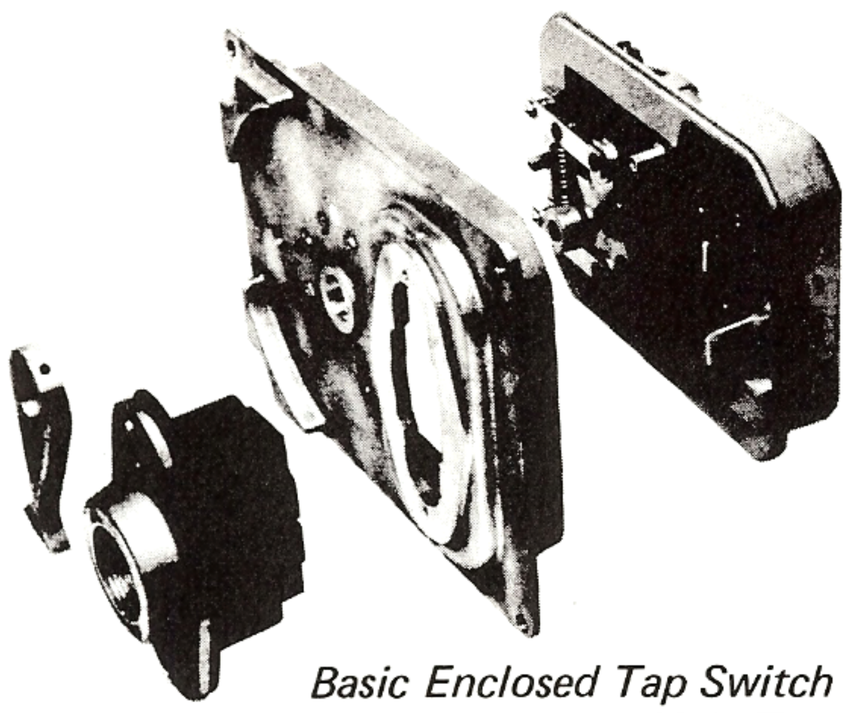

Basic Enclosed Tap Switch
With Disconnect Male Terminals

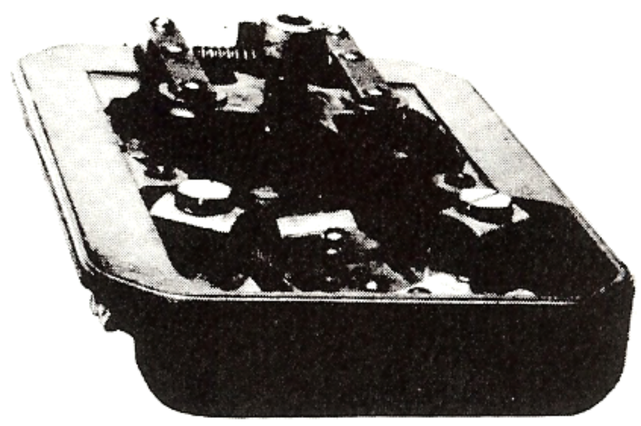

Basic Enclosed Tap Switch
With Solderless Terminals

200 AMPERE TAP SWITCH WITHOUT FRONT COVER AND HANDLE

NUMBER OF POINTS	TYPE TERMINAL		
	SOLDERLESS LUG	BLADE TYPE POST	PIN TYPE POST
4 Point & Off	PC-204-OCZ	PC-204-OCJ	PC-204-OCK
5 Point & Off	PC-205-OCZ	PC-205-OCJ	PC-205-OCK

200 AMPERE TAP SWITCH WITH FRONT COVER* AND HANDLE

NUMBER OF POINTS	TYPE TERMINAL		
	SOLDERLESS LUG	BLADE TYPE POST	PIN TYPE POST
4 Point & Off	PC-204-OEZ	PC-204-OEJ	PC-204-OEK
5 Point & Off	PC-205-OEZ	PC-205-OEJ	PC-205-OEK

** Specify front cover size 7¼'' x 9¼'' or 7¾'' x 10¼''*

200 AMPERE BLADE TYPE DISCONNECT PLUG WITH COVER

1¼'' N.P.T. Hub	PC-300 G-4
1½'' N.P.T. Hub	PC-300 G-3

RoMan Manufacturing Inc.
861 47th Street, S.W., Grand Rapids, MI 49509 (616) 530-8641

BULLETIN S-2.1

Special Products

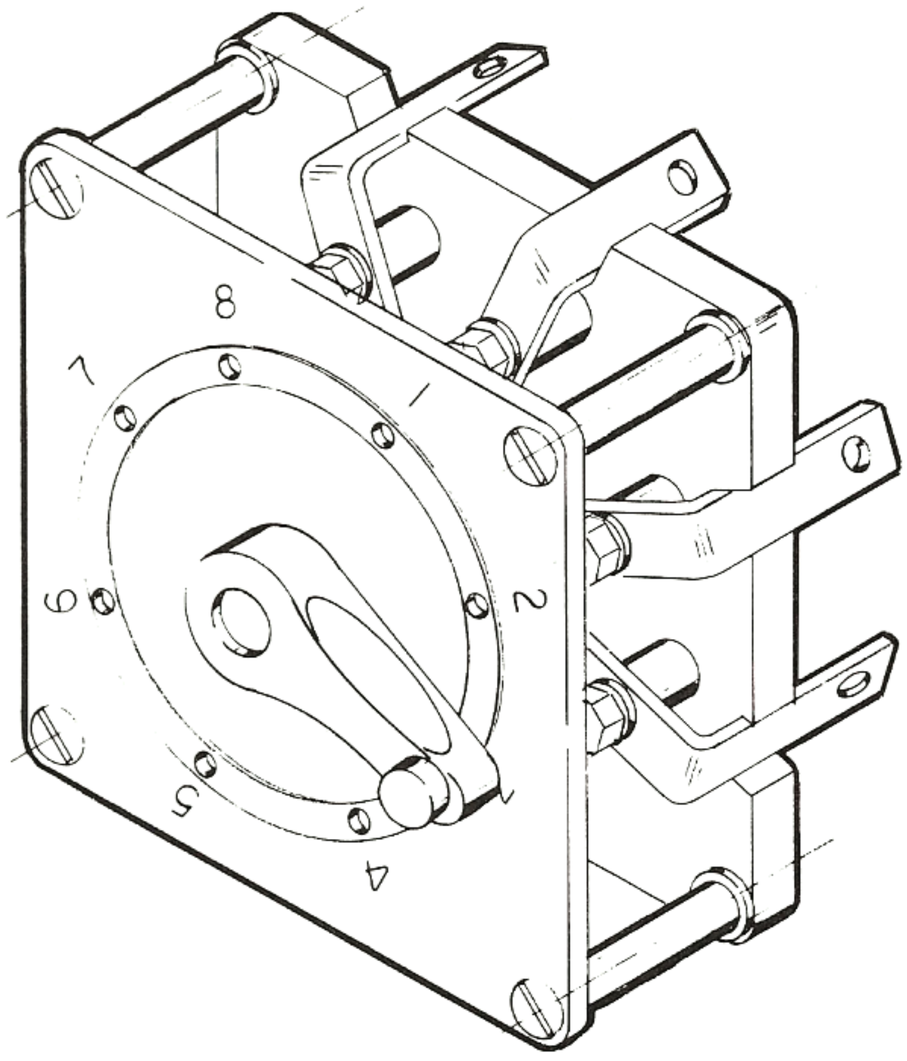

Panel Mount Tap Switch

Content Of This Bulletin:

400 Amp Open Construction Tap Switch

Manufacturing Program

Fixture Type Transformers up to 200 KVA	Request "F" Series Bulletin
Portable Gun Type Transformers up to 200 KVA	Request "G" Series Bulletin
Machine Type Transformers up to 500 KVA	Request "M" Series Bulletin
Transgun/Robot Type Transformers	Request "T" Series Bulletin
Special Products	Request "S" Series Bulletin

RoMan Manufacturing Inc.

861 47th Street, S.W., Grand Rapids, MI 49509 Phone (616) 530-8641 FAX (616) 530-8953

Type RS panel mount tap switches are designed for easy installation on sheet metal panels.

400 AMP-NON-LOAD BREAK-600 VOLT AC OR DC

AMPERE RATING	2 POSITION	3 POSITION	4 POSITION	5 POSITION	6 POSITION	7 POSITION	8 POSITION
400	RS-402	RS-403	RS-404	RS-405	RS-406	RS-407	RS-408

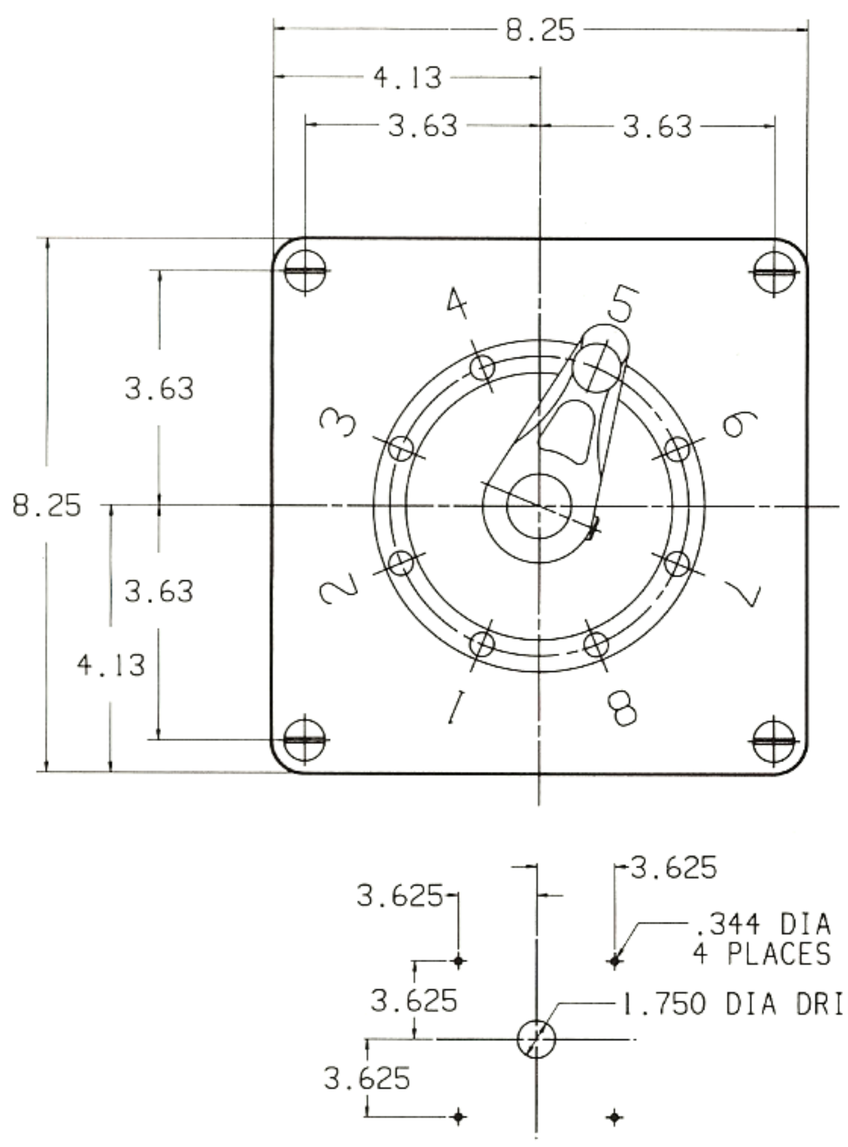

PANEL DRILLING

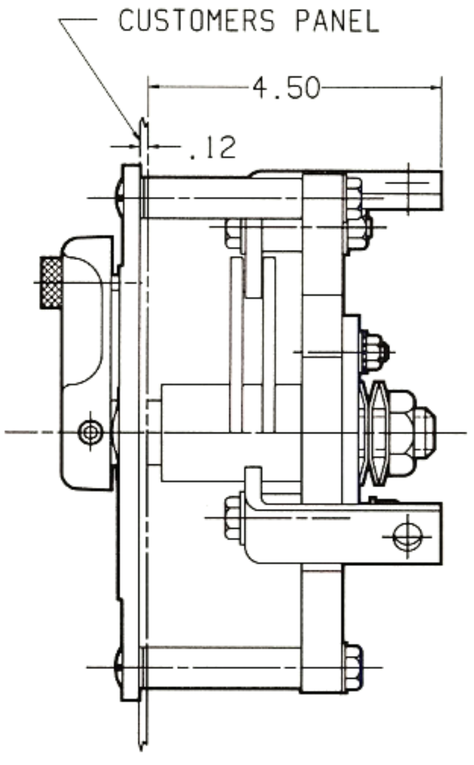

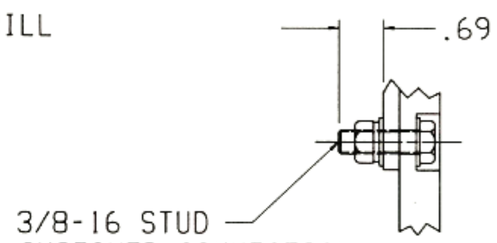

SECTION A-A

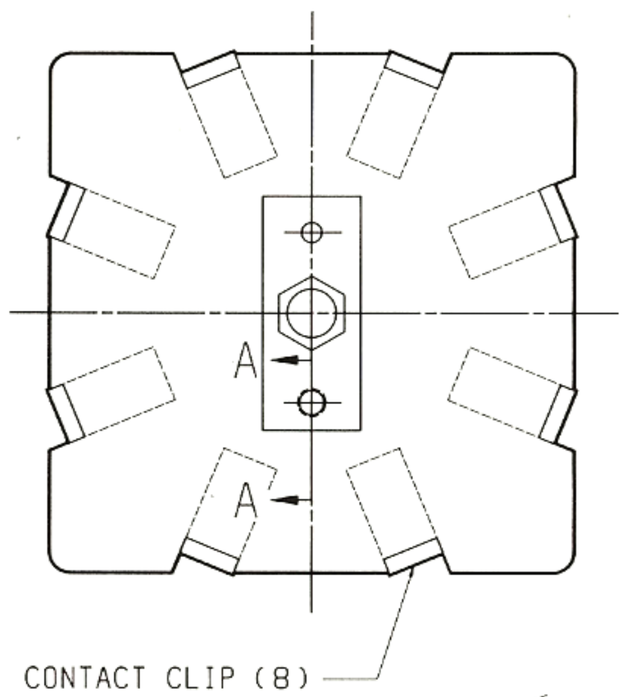

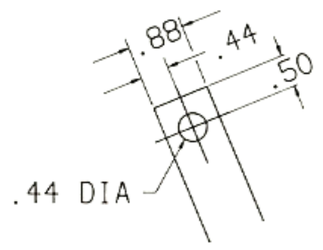

CONTACT CLIP

RoMan Manufacturing Inc.	PANEL MOUNT TAP SWITCH 400 AMP - NON-LOAD BREAK - 600 VOLTS AC OR DC	DRAWING NO. R2000 DATE: MAR. 1989

Drawing No. R2000

RoMan Manufacturing Inc.

861 47th Street, S.W., Grand Rapids, MI 49509 Phone (616) 530-8641 FAX (616) 530-8953

DATE 11/89

BULLETIN S-3

Special Products

Grounding Reactors

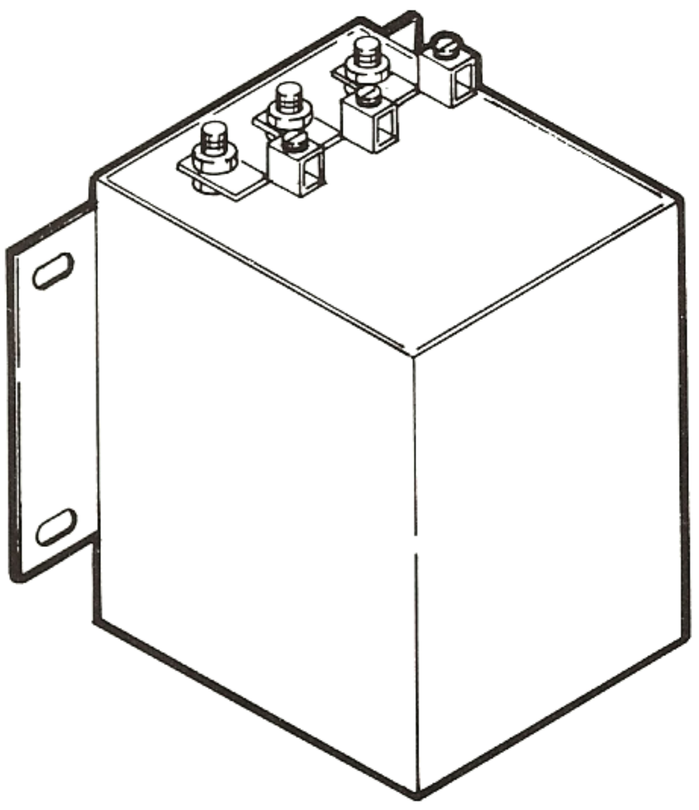

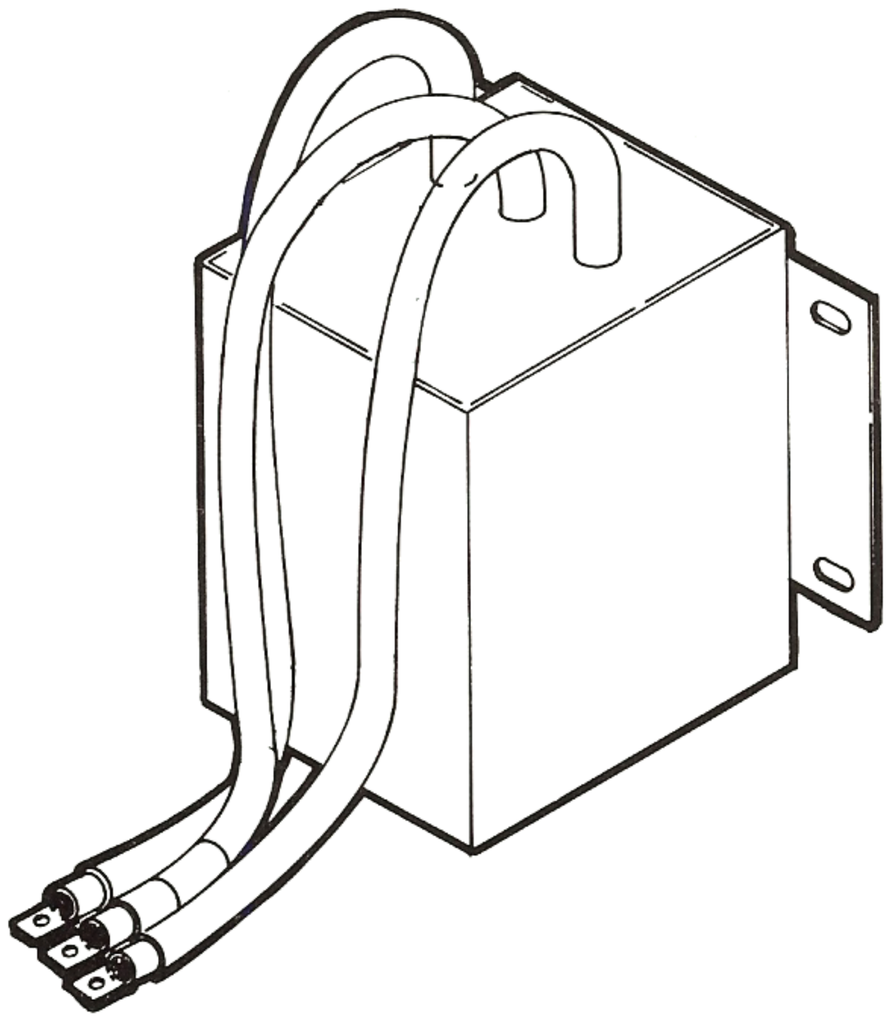

Manufacturing Program

Fixture Type Transformers up to 200 KVA	Request "F" Series Bulletin
Portable Gun Type Transformers up to 200 KVA	Request "G" Series Bulletin
Machine Type Transformers up to 500 KVA	Request "M" Series Bulletin
Transgun/Robot Type Transformers	Request "T" Series Bulletin
Special Products	Request "S" Series Bulletin

RoMan Manufacturing Inc.

861 47th Street, S.W., Grand Rapids, MI 49509 Phone (616) 530-8641 FAX (616) 530-8953

Purpose: The grounding reactor is used where direct grounding of the welding circuit is not practical to protect the operator from electrical shock hazard, caused by capacitive coupling or insulation failure between primary and secondary coils of the welding transformer. Typical applications are portable welding gun installations, transgun installations for robots or series welding and push-pull welding circuits in multispot welders. The AWS publication ANSI/ASC Z49.1-1983 entitled "Safety In Welding and Cutting" lists under Paragragh 12.4.6 the grounding reactor as the recommended safety device for these applications.

Rating: The grounding reactor is designed for an operating voltage which must be equal to or higher than the maximum secondary voltage of the welding transformer and a ground conductor size which must be equal to or larger than required by the National Electrical Code. Series RGR 24/4 grounding reactors have an operating voltage of 24 volts maximum at 60 Hertz and a ground conductor size of No. 4 AWG copper wire.

Construction and Function: The grounding reactor consists of a center tapped coil installed on a magnetic core which is placed in a sheet metal enclosure and fully potted with an epoxy resin. This construction prevents damage to the insulation from contaminants such as oil, water, weld spatter etc. and protects the device from mechanical damage.

Electrically, the lead ends of the grounding reactor coil are connected to the secondary terminals of the welding transformer and the center tap lead is connected to ground. Under normal conditions the impedance of the grounding reactor limits the flow of ground loop circulating currents but provides a ground path for capacitive charges of the secondary. In case of an insulation failure between the primary windings and the secondary of the welding transformer, the secondary assumes an electrical potential to ground or in more common terms, becomes electrically 'live'. The resultant fault current flows in both parts of the center tapped coil which "buck" each other creating a low impedance path to ground and causing the primary protection device to open.

Application: Select the appropriate grounding reactor by:

1. Determine the maximum secondary voltage of the welding transformer to be protected. See Column 1 of Selection Guide.
2. Determine the ampere rating of the fuse or circuit breaker installed in the primary circuit to protect the welding transformer. See Column 2 of Selection Guide.
3. Select type of connection desired. See Column 3 of Selection Guide.
4. Select grounding reactor model number. See Column 4 of Selection Guide.

SELECTION GUIDE

COLUMN 1 MAXIMUM SECONDARY VOLTAGE	COLUMN 2 FUSE AMPERE RATING	COLUMN 3 TYPE OF CONNECTIONS	COLUMN 4 GROUNDING REACTOR MODEL NUMBER	APPROX. KVA RATING AT 50% DUTY CYCLE		REQUIRED GROUND CONDUCTOR SIZE	WEIGHT (LBS)	DRAWING NO.
				240V	480V			
Up to 24 Volts/ 60 Hz	Up to 300 AMP	#4 AWG Leads	RGR 24/4-1099	75	150	#4 AWG CU	18	R1474 Page 3
		Solderless Lugs	RGR 24/4-1100	75	150	#4 AWG CU	16	R1473 Page 4
Up to 28 Volts/ 60 Hz	Up to 300 AMP	#4 AWG Leads	RGR 28/4-1150	75	150	#4 AWG CU	20	R1474 Page 3
		Solderless Lugs	RGR 28/4-1151	75	150	#4 AWG CU	18	R1473 Page 4
Up to 28 Volts/ 60 Hz	Up to 500 AMP	#2 AWG Leads	RGR 28/2-1152	150	300	#2 AWG CU	27	R1474 Page 3
		Solderless Lugs	RGR 28/2-1153	150	300	#2 AWG CU	24	R1473 Page 4
Up to 34 Volts/ 60 Hz	Up to 500 AMP	#2 AWG Leads	RGR 34/2-1513	150	300	#2 AWG CU	31	R1474 Page 3
		Solderless Lugs	RGR 34/2-1514	150	300	#2 AWG CU	28	R1473 Page 4

See NEC Table 250-95 for required ground conductor size in respect to rating of overcurrent device.
The proper sizing, application, installation and wiring of the grounding reactor is the sole responsibility of the user.

MODEL NUMBER	DIM "A"	GRD WIRE SIZE REQ'D
RGR-24/4 - 1099	5.12	#4 AWG CU.
RGR-28/4 - 1150	5.75	#4 AWG CU.
RGR-28/2 - 1152	7.00	#2 AWG CU.
RGR-34/2 -1513	7.81	#2 AWG CU.

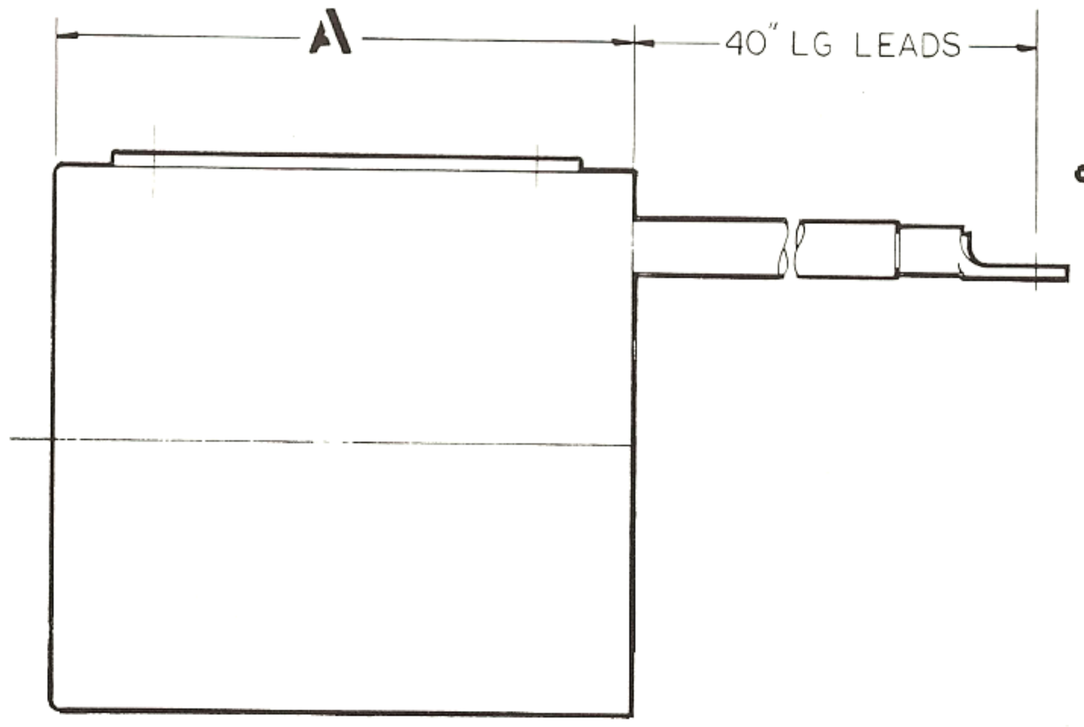

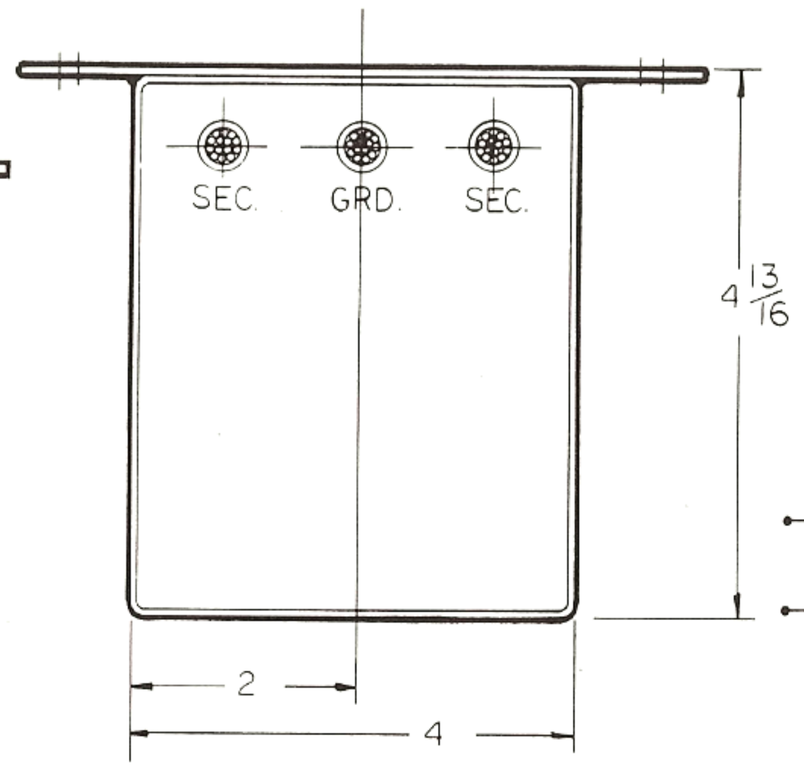

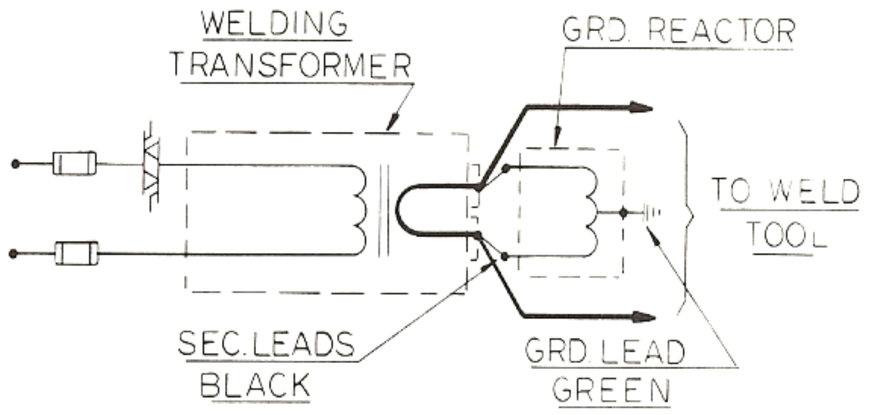

TYP GUN, MACHINE OR TRANSGUN TRANSFORMER CONN

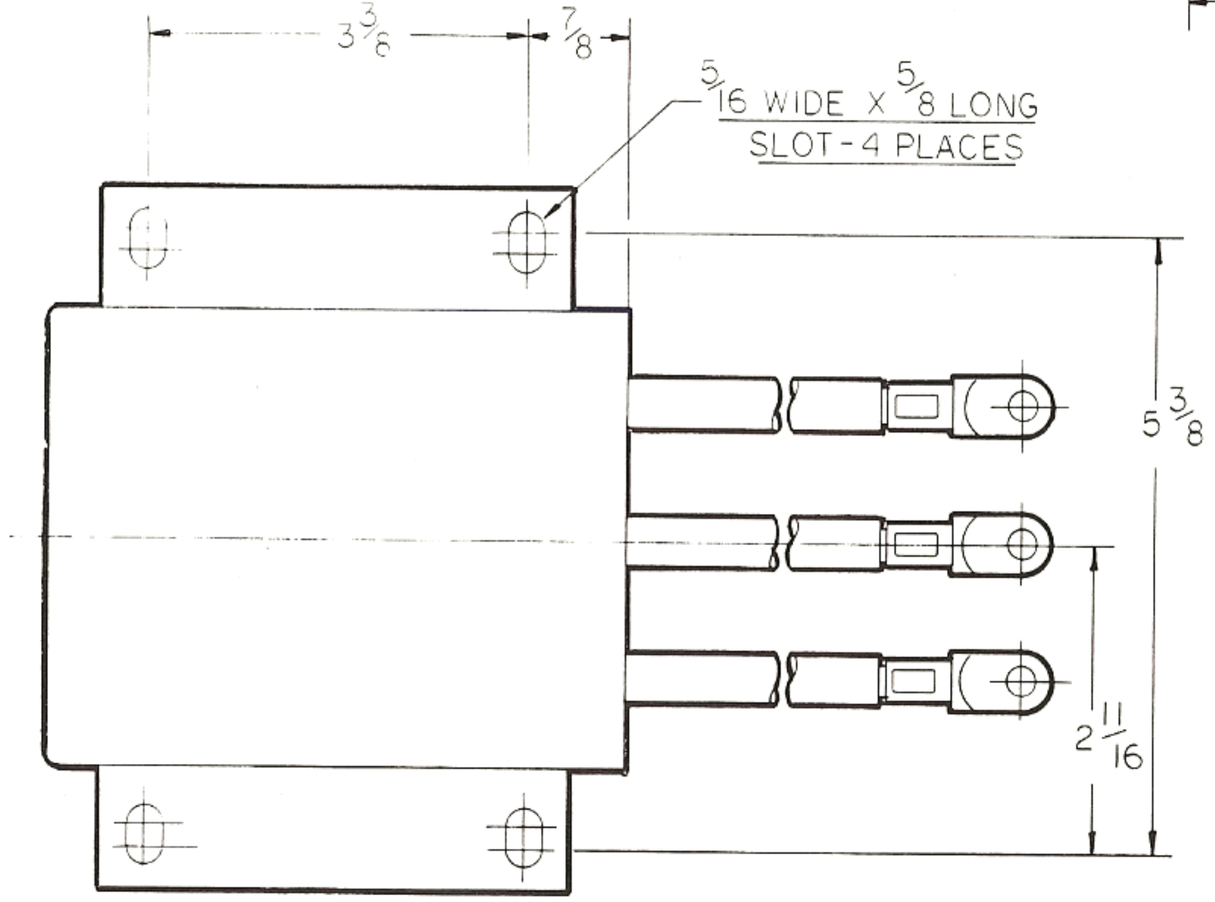

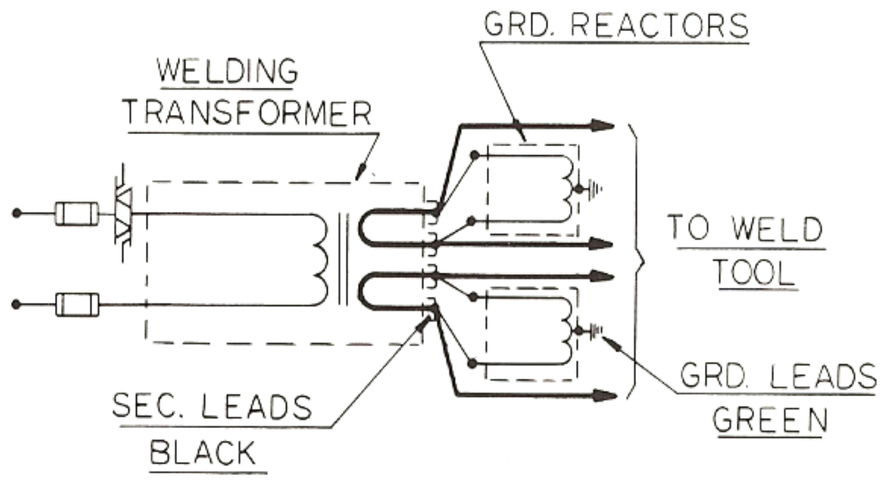

TYP. MULTI SPOTWELDING TRANSFORMER CONN.

RoMan Manufacturing Inc.

GROUNDING REACTOR

WITH WIRE LEADS

DRAWING NO. R-1474

DATE: AUG. 12, 86

REV-A 3-15-88

MODEL NUMBER	DIM. "A"	GRD. WIRE SIZE REQ'D
RGR-24/4-1100	5.12	#4 AWG CU.
RGR-28/4-1151	5.75	#4 AWG CU.
RGR-28/2-1153	7.00	#2 AWG CU.
RGR-34/2-1514	7.81	#2 AWG CU.

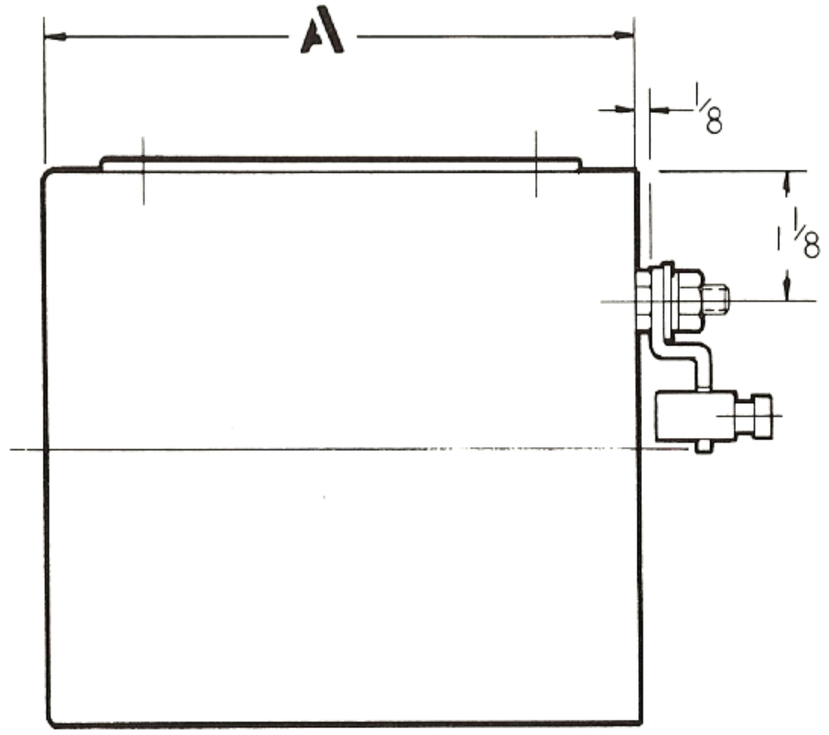

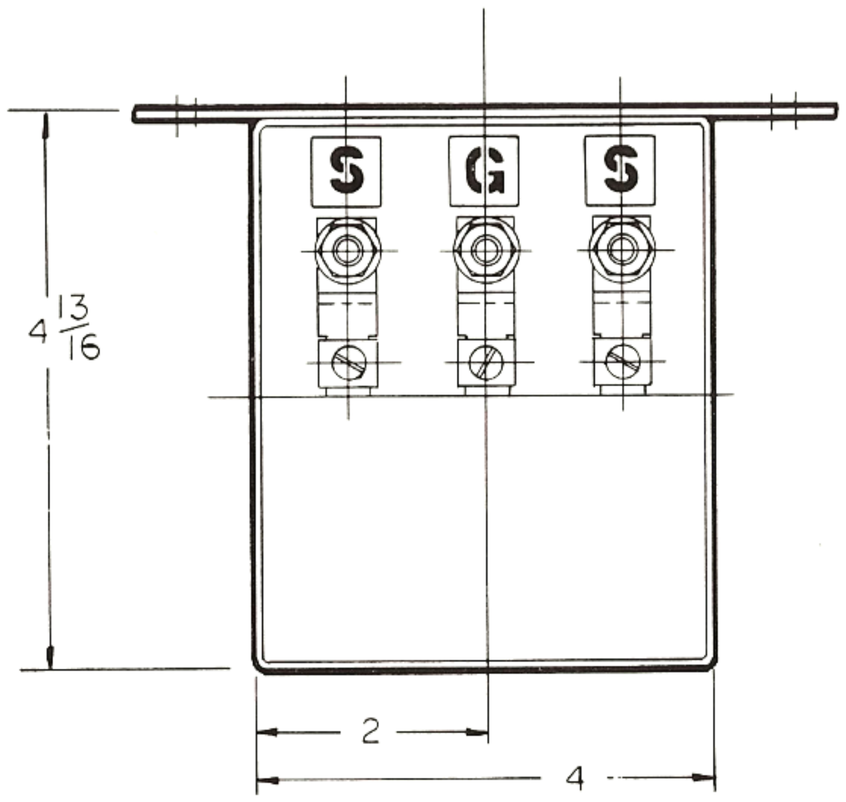

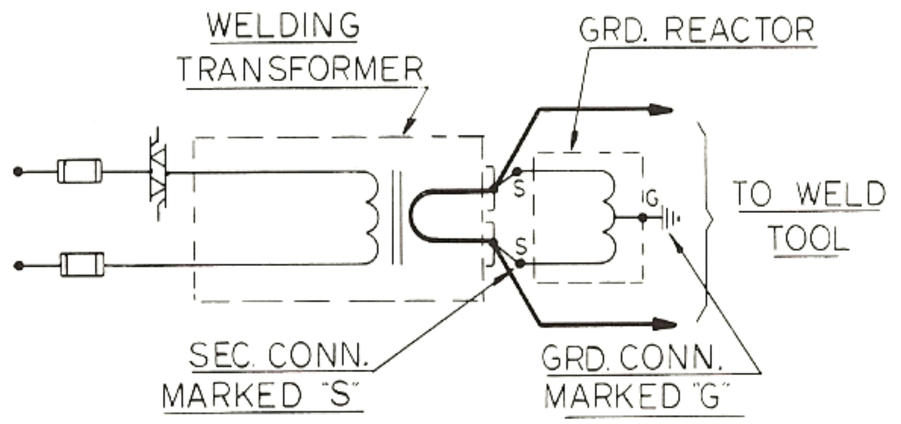

TYP. GUN, MACHINE OR TRANSGUN TRANSFORMER CONN.

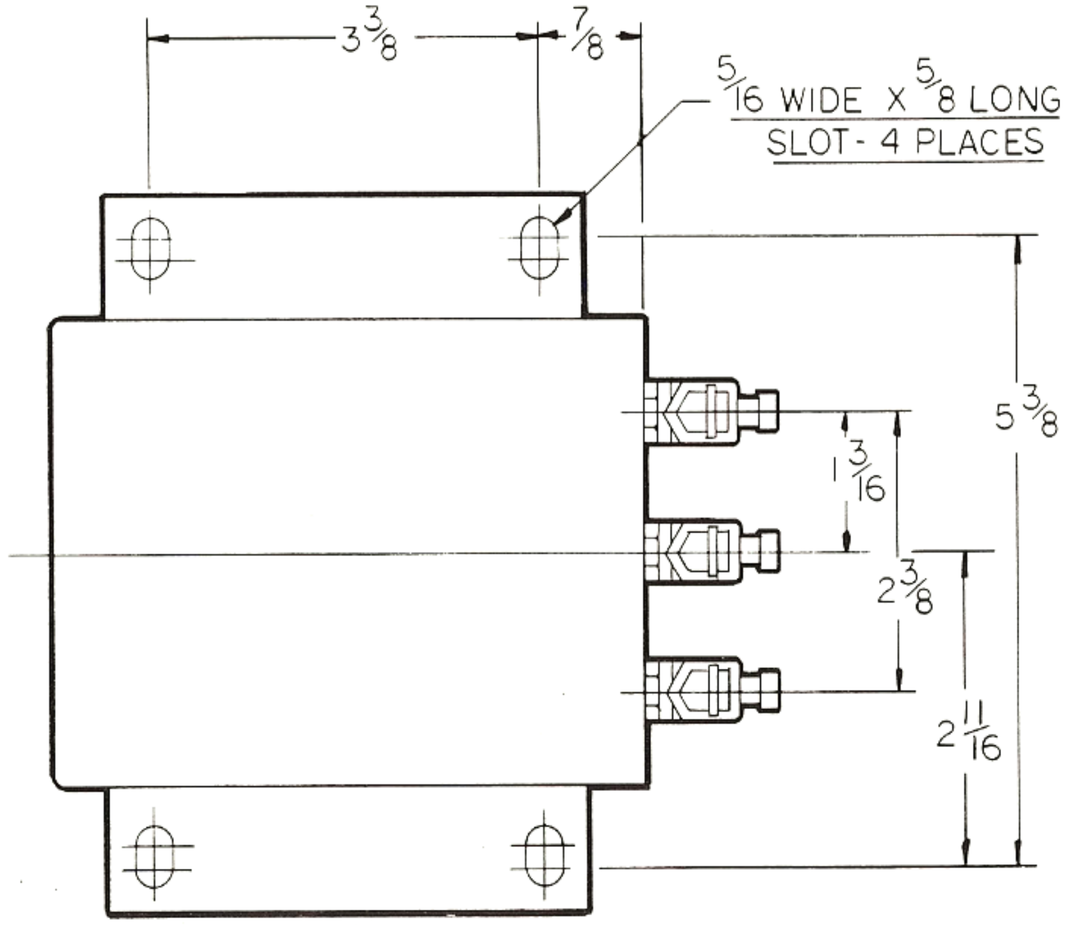

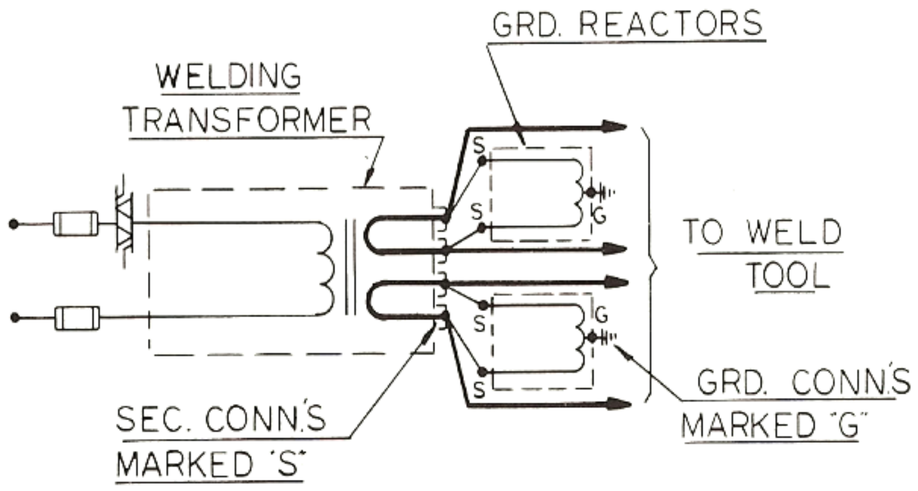

TYP. MULTI-SPOTWELDING TRANSFORMER CONN.

RoMan Manufacturing Inc.

GROUNDING REACTOR
WITH SOLDERLESS LUGS

DRAWING NO. R-1473
DATE: AUG. 11, 86

REV-A
3-15-88

BULLETIN S-4

Special Products



IMPEDANCE MASTER MODEL IM-91

Portable Impedance Meter for Resistance Welding Equipment

Measures Tip to Tip Impedance of Transguns with and without Transformer

Direct Digital Readout of
-Impedance in Micro OHMS
-Resistance in Micro OHMS
-Inductive Reactance in Micro OHMS

Manufacturing Program

Fixture Type Transformers up to 200 KVA	Request "F" Series Bulletin
Portable Gun Type Transformers up to 200 KVA	Request "G" Series Bulletin
Machine Type Transformers up to 500 KVA	Request "M" Series Bulletin
Transgun/Robot Type Transformers	Request "T" Series Bulletin
Special Products	Request "S" Series Bulletin

RoMan Manufacturing Inc.

861 47th Street, S.W., Grand Rapids, MI 49509 Phone (616) 530-8641 FAX (616) 530-8953

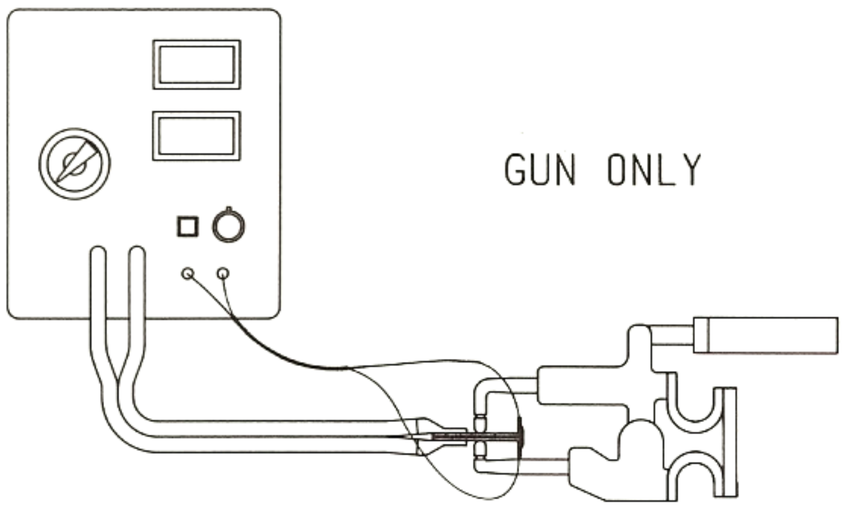

GUN ONLY

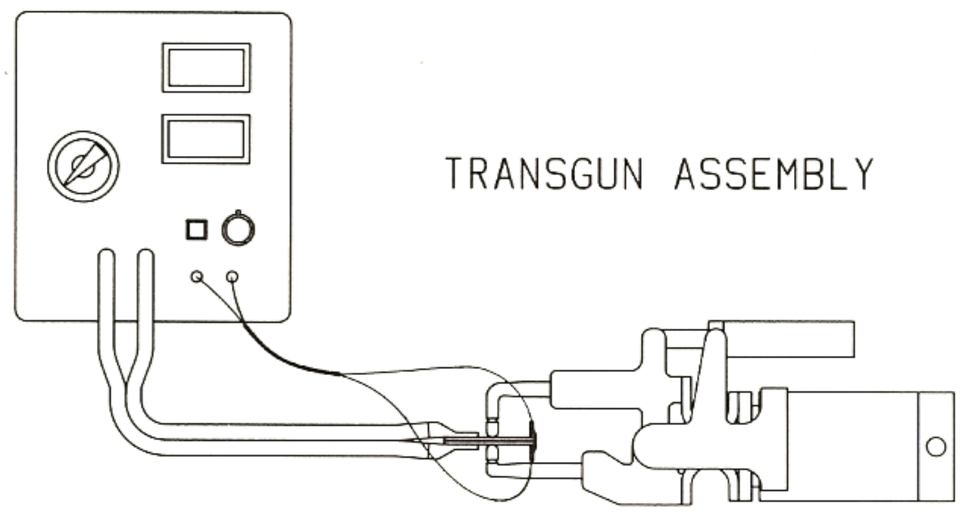

TRANSGUN ASSEMBLY

TYPICAL APPLICATIONS

PRINCIPLE OF OPERATION

The Impedance Master IM-91 with its variable low voltage 60 Hertz power source, is capable of driving a test current through the impedance of a resistance welding circuit.

The Impedance Master IM-91measures the current, voltage and zero cross over of the two values, and calculates the impedance (Z), resistance (R), and inductive reactance (X_L).

SPECIFICATIONS

Input: 120 VAC, 60Hz, 1 Ø, 1.00 A Max.

Output: 60 Hz, 600 MilliVolts Max. Open Circuit
250 Amperes Max. with Shorted 6 Foot Current Leads

Measuring Range: 0 to 2500 Micro OHMS
60 Hertz Impedance

Accuracy: ± 1%

Readouts: 9/16 Digital LED

Current Leads: 6 Ft. #2 AWG Extra Flexible Cable

Current Lead Adaptor: Designed for Insertion between Welding Tips

Voltage Leads: 6 Ft. 2 Cond. #18 AWG Lead with Alligator Clips

Dimensions: 9'' W. x 12'' H. x 14'' D.

Weight: 32 Lbs.

OPTIONS

Special adaptors for current leads

Special voltage probes

Shorting bars for weld circuit

FEATURES

6 Foot Current and Voltage Leads to provide access to resistance welding circuits in large tooling

Portable

Ease of Operation

Easy to read with large LED readouts

Easy current and voltage lead connections

Direct readout in Micro OHMS

Rugged Device

RS232 Serial Printer Port

USES

Measures Impedance, AC Resistance, and Inductive Reactance at 60 Hertz Frequency of:

- Single phase AC resistance welding machines
- Portable guns
- Transguns without Transformer
- Transguns with Transformer
- Kickless cables

Measures 60 Hertz impedance of single phase AC welders from welding tip to power connection in the welding controls

Determine tip to tip short circuit current of single phase AC resistance welders

Trouble shooting of single phase AC resistance welders

Checking for current shunting in resistance welding tools (decrease of original impedance)

Checking for deterioration of resistance welding tools (increase of original impedance)

DATE 5/91

BULLETIN S-5

Special Products

Weld Current Equalizer

PATENT APPLIED FOR

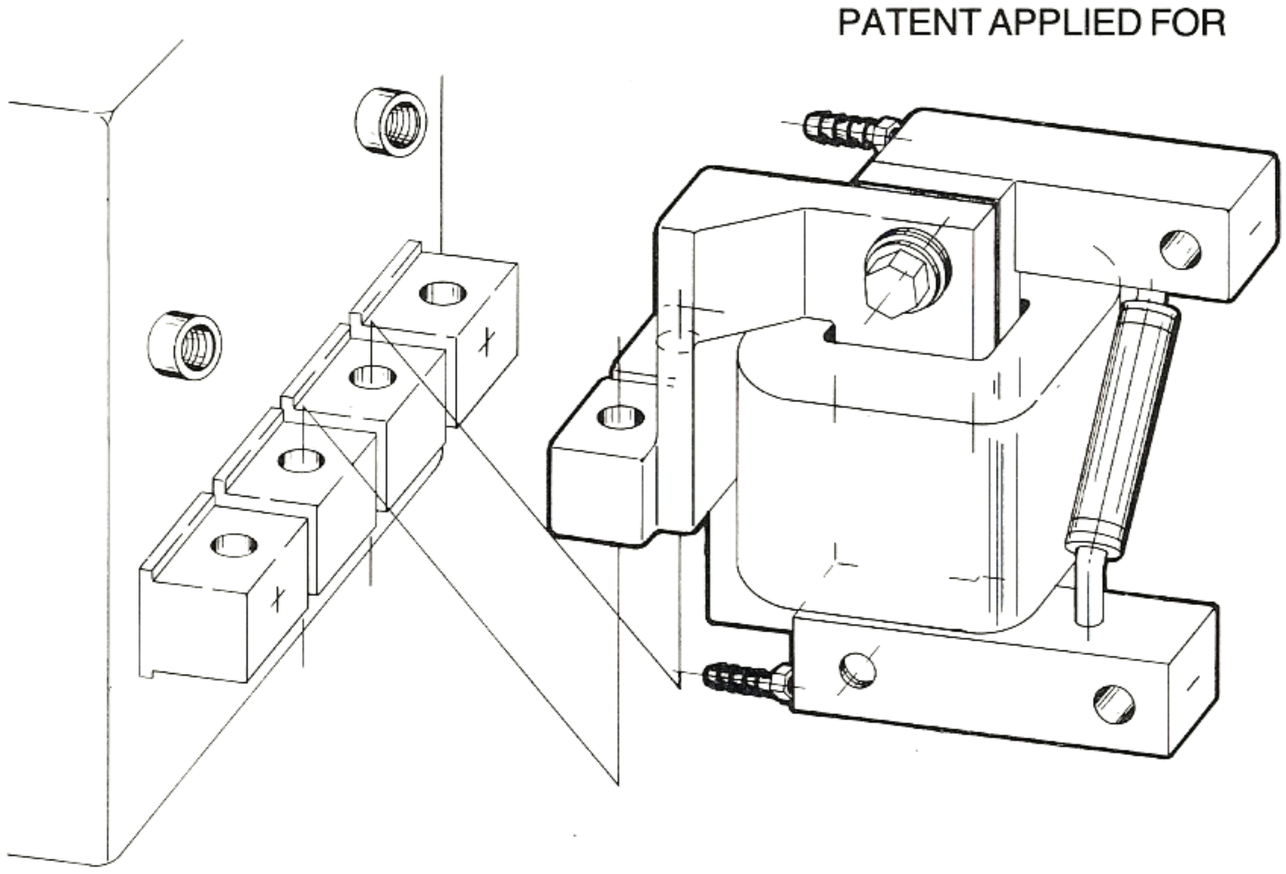

Content Of This Bulletin:

A Device to Improve Weld Quality by Equalizing Weld Currents in New and Existing Multi Spot Welding Machines

Manufacturing Program

Fixture Type Transformers up to 200 KVA	Request "F" Series Bulletin
Portable Gun Type Transformers up to 200 KVA	Request "G" Series Bulletin
Machine Type Transformers up to 500 KVA	Request "M" Series Bulletin
Transgun/Robot Type Transformers	Request "T" Series Bulletin
Special Products	Request "S" Series Bulletin

RoMan Manufacturing Inc.

861 47th Street, S.W., Grand Rapids, MI 49509 Phone (616) 530-8641 FAX (616) 530-8953

PURPOSE: In multi-spot welding systems, equal weld currents are expected in the two weld circuits powered by one multi-spot transformer. For this reason, impedance balanced transformers are used and the designer of welding tools exercises great care to make the geometry of the two welding circuits identical. Regardless of these efforts, unbalances in weld currents of 10% and above exist due to uncontrollable differences between the welding circuits and deterioration of welding loop components causing unacceptable weld quality. The weld current equalizer balances the weld currents by transformer action. Other applications of the weld current equalizer are to balance the weld currents between two welding circuits operated by two single secondary transformers and to use the device as a weld current splitter to power two weld circuits from one welding transformer having a single secondary. Typical equalizer connections are shown on Page 4. The advantages of the weld current equalizer are:

1. Eliminates equalization of currents by trial and error;
2. Compensates for deterioration of welding loop components;
3. Easy to install on new or existing machines;
4. No adjustments required;
5. No regular maintenance required;
6. Rugged device.

RATING: The curves on the rating graph represent the maximum unbalance of weld currents expressed in percent (%), which the weld current equalizers can balance as a function of the maximum secondary voltage available from the welding transformer. The process of determining the required rating is shown in the following examples.

EXAMPLE 1

Maximum Secondary Voltage 7.5 Volts.
Welding Current in Loop 1 15,500 A.
Welding Current in Loop 2 14,000 A.
Unbalance 15,500 - 14,000 = 1,500 A.
% Unbalance 1,500 ÷ 14,000 x 100 = 10.7%*
From Rating Curve: Use RWE 7/15

EXAMPLE 2

Maximum Secondary Voltage 11.5 Volts.
Welding Current in Loop 1 16,200 A.
Welding Current in Loop 2 18,400 A.
Unbalance 18,400 - 16,200 = 2,200 A.
% Unbalance 2,200 ÷ 16,200 x 100 = 13.6%*
From Rating Curve: Use RWE 12/15

*NOTE: The percent unbalance must be based on the lower weld current representing 100%.

SELECTION

1. Determine maximum secondary voltage of transformer used.
   Locate voltage on rating graph.
2. Determine % unbalance
   a. For existing installations, use data from actual measurements. See examples under RATING.
   b. For new installation, assume % unbalance from prior experience, generally between 10 to 15%.
   Locate % unbalance on rating graph.
3. Bring voltage and % unbalance to intersect on rating graph, select RWE 7/15 series equalizer for points to the left of curve marked RWE 7/15. Select RWE 12/15 series equalizer for points falling between curves marked RWE 7/15 and RWE 12/15.
4. Determine secondary lug configuration of transformer used.
   RWMA inline lugs (Bulletin F-1, F-3)
   RWMA staggered lugs (Bulletin F-2.1, F-4.1)
   RoMan staggered lugs (Bulletin F-2, F-4)
5. Select the model number of the weld current equalizer from the selection table using the appropriate columns determined in Steps 3 and 4.

RATING GRAPH

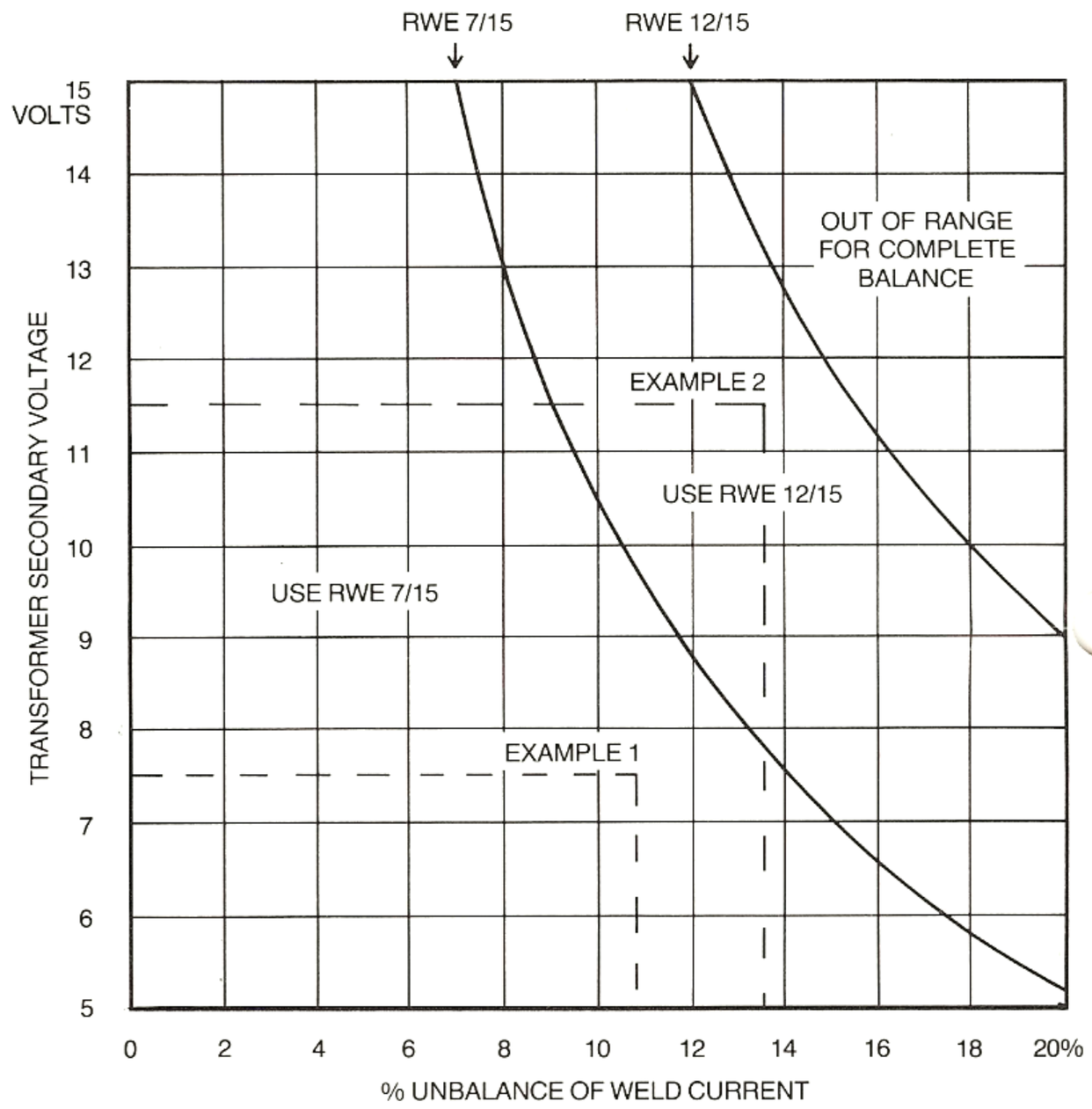

SELECTION TABLE

EQUALIZER RATING FROM STEP 3	TRANSFORMER SECONDARY LUG CONFIGURATION FROM STEP 4	MODEL NUMBER	WEIGHT LBS.	DWG.
RWE 7/15	RWMA Inline Secondary Lugs	RWE 7/15A-1689	19	R1959 Page 3
	RWMA Staggered Secondary Lugs	RWE 7/15E-1691		
	RoMan Staggered Secondary Lugs	RWE 7/15B-1690		
RWE 12/15	RWMA Inline Secondary Lugs	RWE 12/15A-1668	24	
	RWMA Staggered Secondary Lugs	RWE 12/15E-1670		
	RoMan Staggered Secondary Lugs	RWE 12/15B-1669		

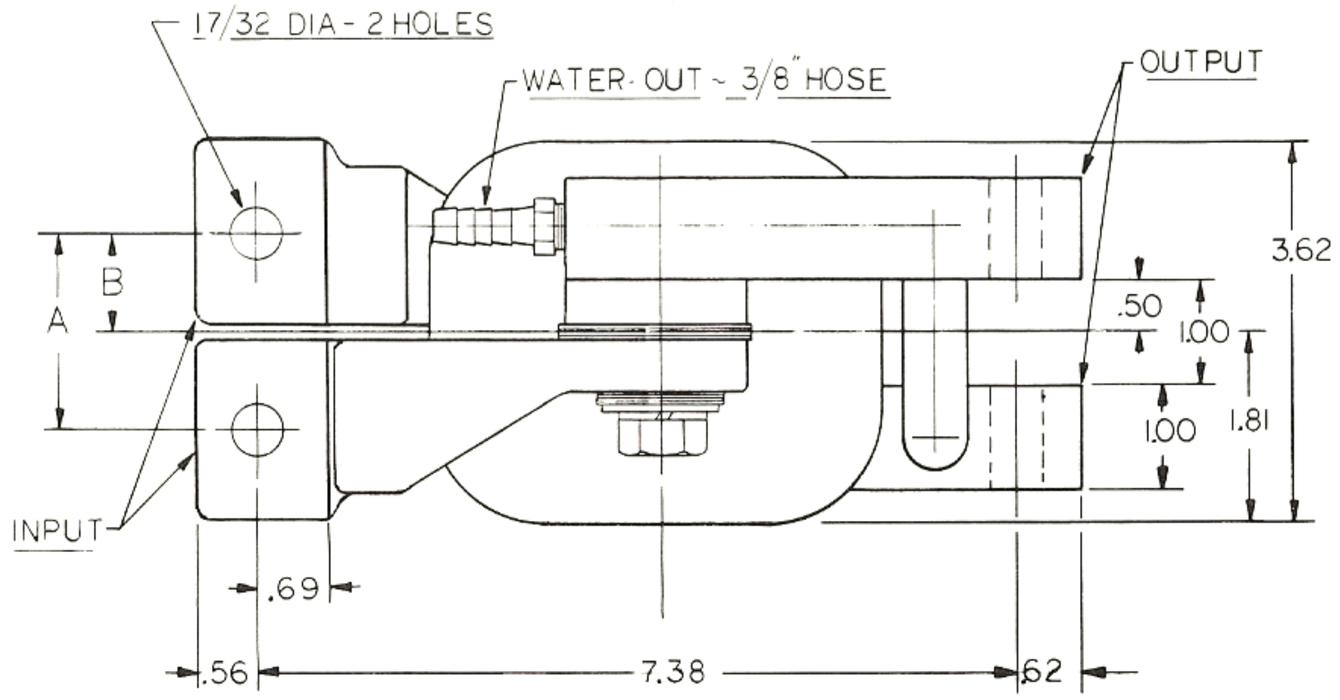

MODEL NO.	USED WITH	DIM A	DIM B	DIM C	DIM D	DIM E	DIM F
RWE 12/15A-1668	RWMA INLINE SECONDARY LUGS	1.68	.84	5.12	6.38	3.62	3.68
RWE 12/15B-1669	ROMAN STAGGERED SECONDARY LUGS	2.25	1.12	5.12	6.38	3.62	3.68
RWE 12/15E-1670	RWMA STAGGERED SECONDARY LUGS	1.88	.94	5.12	6.38	3.62	3.68
RWE 7/15A-1689	RWMA INLINE SECONDARY LUGS	1.68	.84	3.75	5.00	2.25	3.00
RWE 7/15B-1690	ROMAN STAGGERED SECONDARY LUGS	2.25	1.12	3.75	5.00	2.25	3.00
RWE 7/15E-1691	RWMA STAGGERED SECONDARY LUGS	1.88	.94	3.75	5.00	2.25	3.00

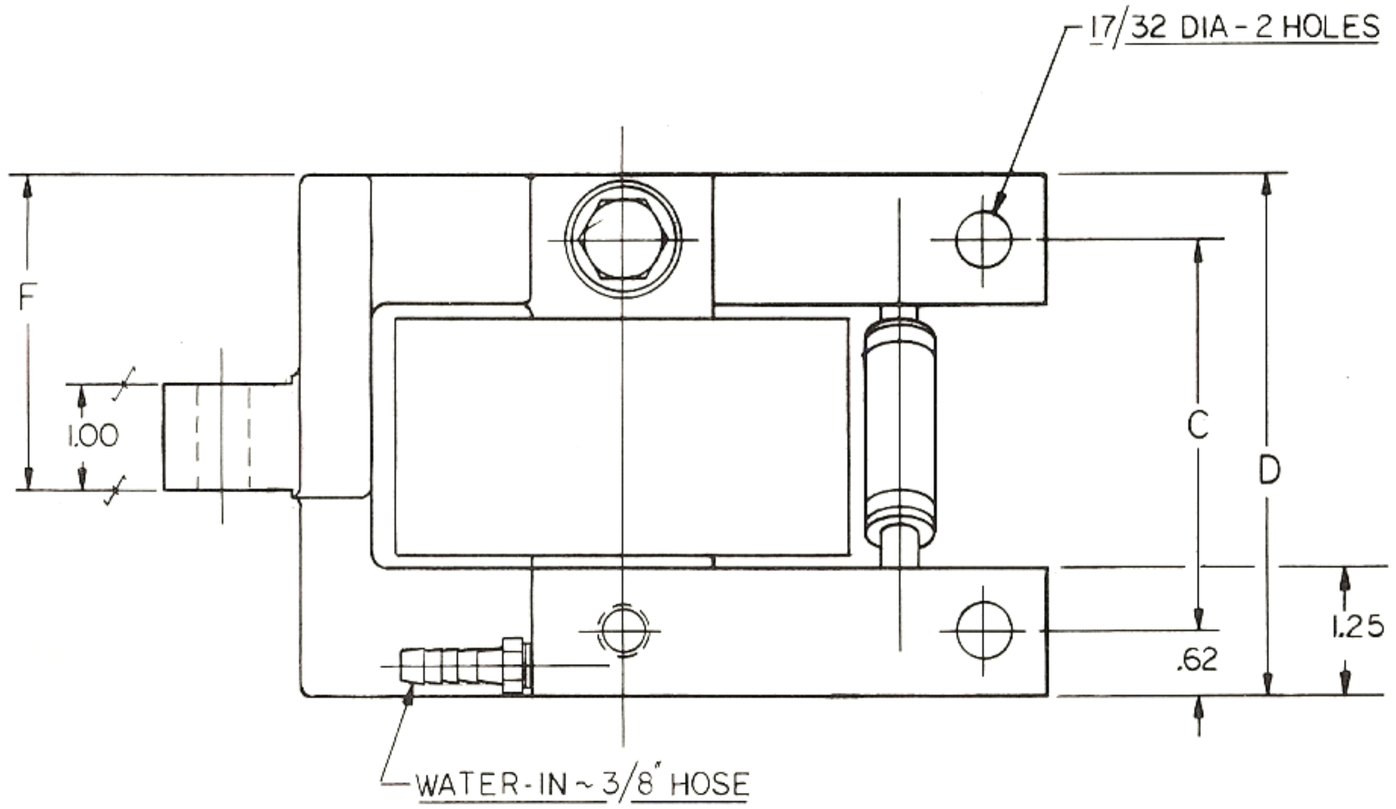

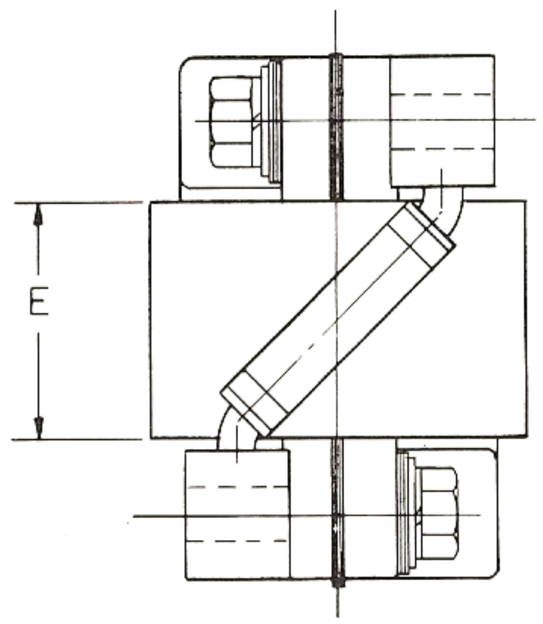

RoMan Manufacturing Inc.

WELD - CURRENT EQUALIZER

DRAWING NO. R1959
DATE: JAN. 13, 1989

TYPICAL EQUALIZER CONNECTIONS

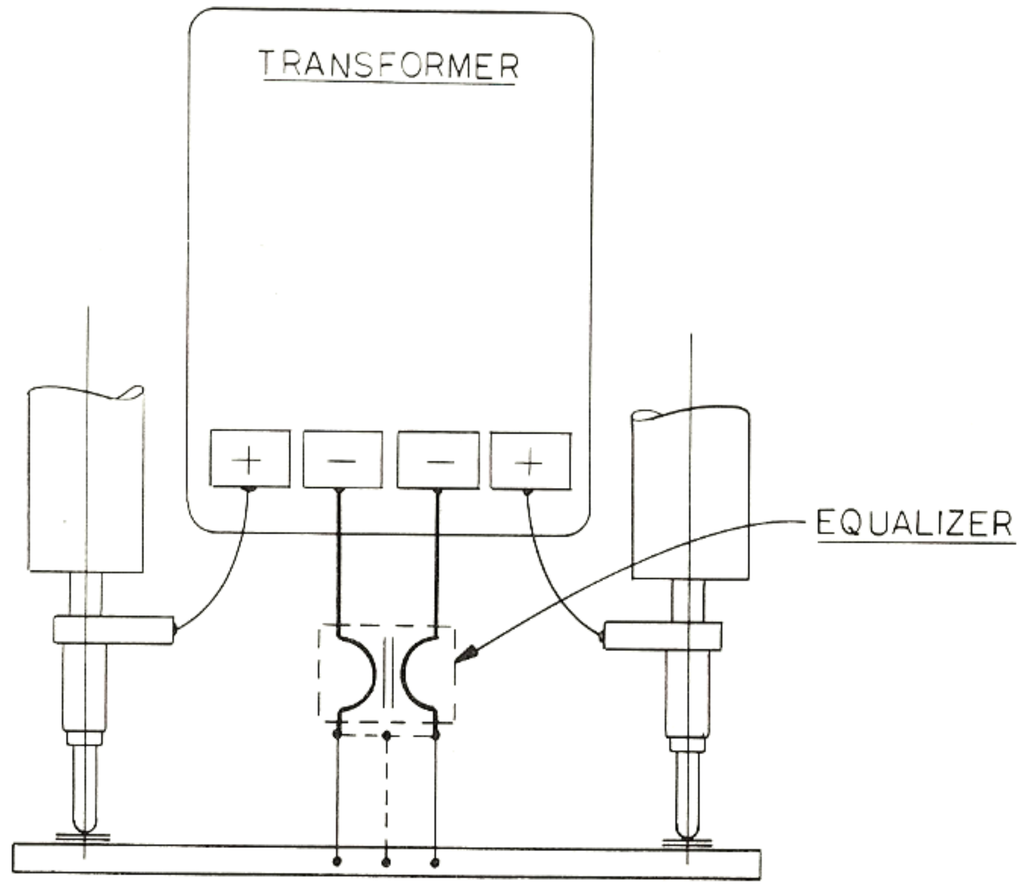

DIRECT - WELDING

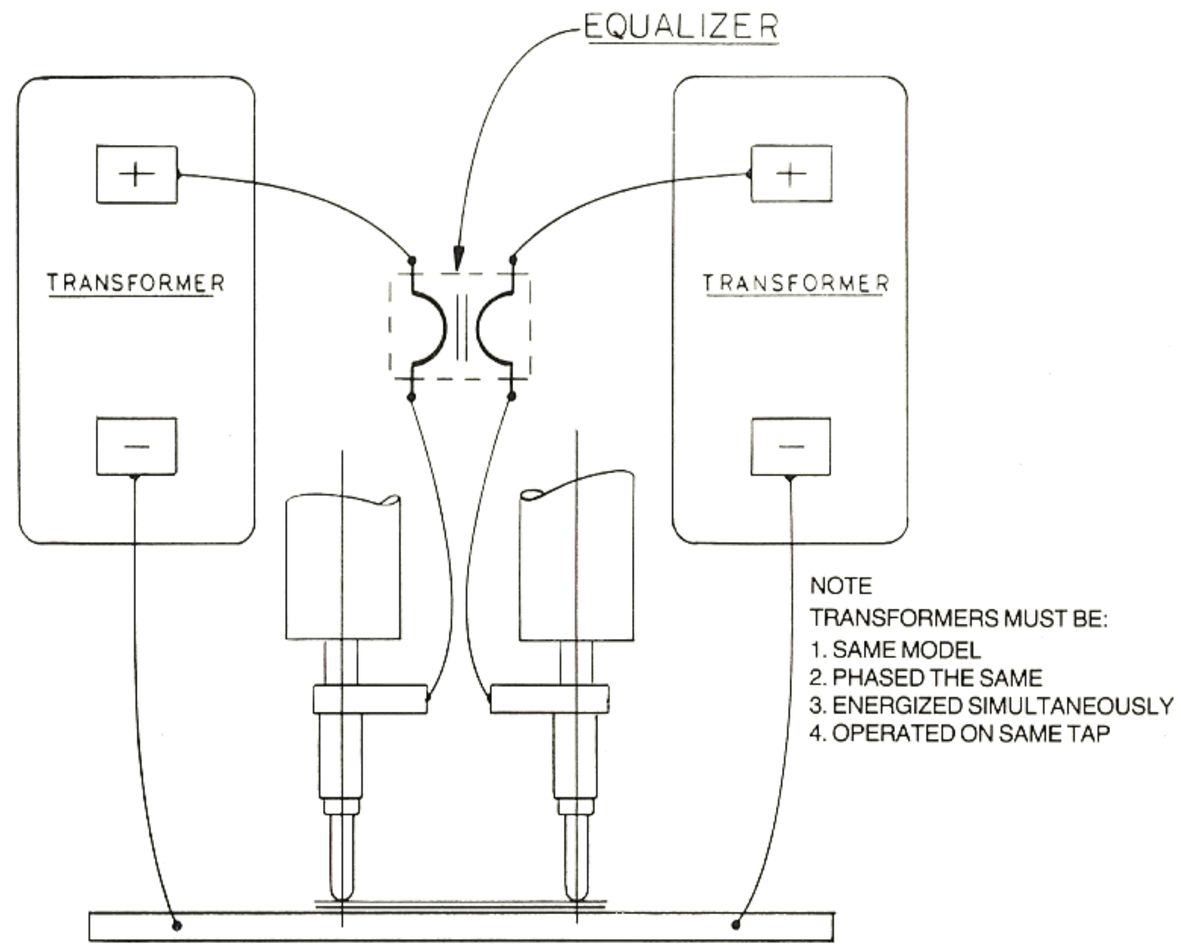

NOTE
TRANSFORMERS MUST BE:
1. SAME MODEL
2. PHASED THE SAME
3. ENERGIZED SIMULTANEOUSLY
4. OPERATED ON SAME TAP

WELD-CURRENT EQUALIZER USED ON TWO SINGLE SECONDARY TRANSFORMERS

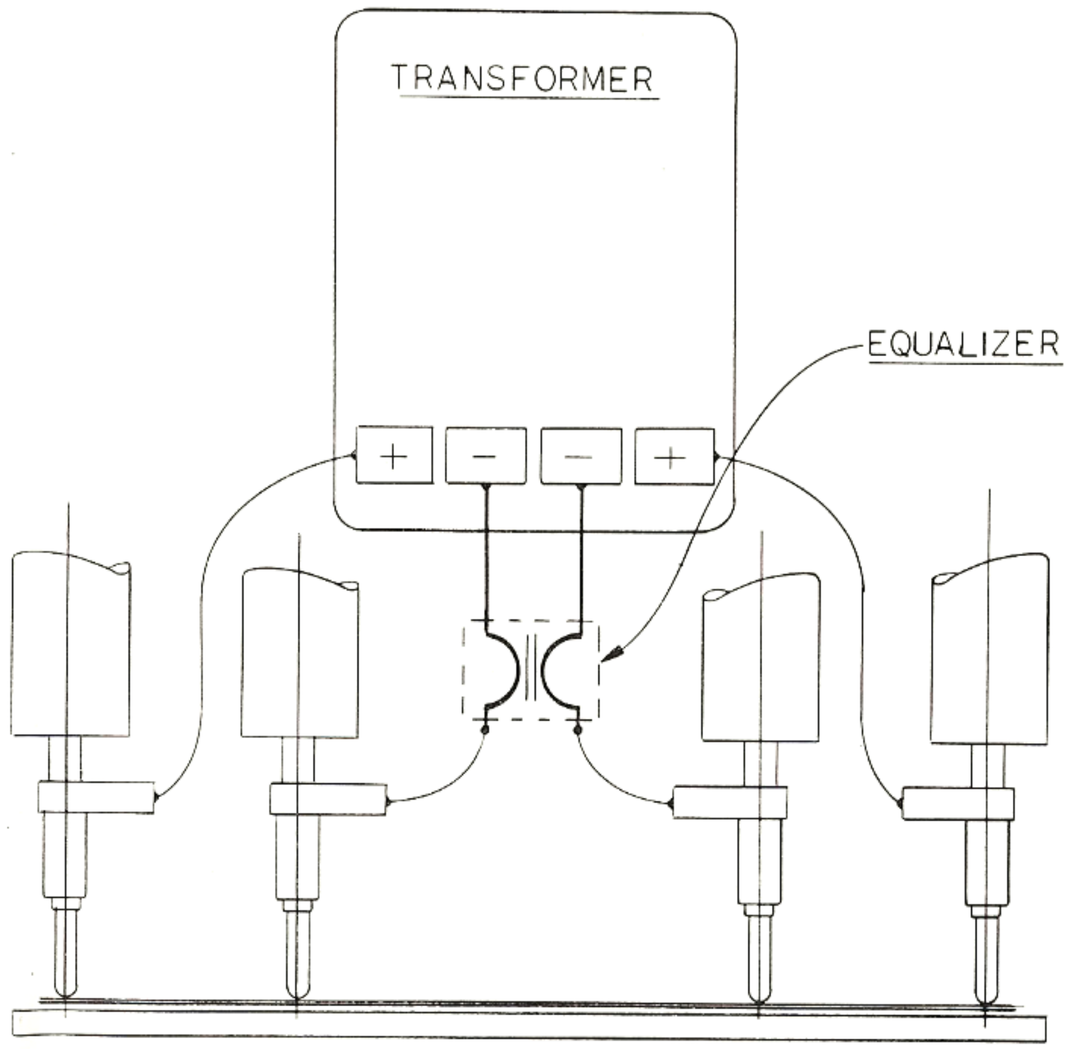

SERIES - WELDING

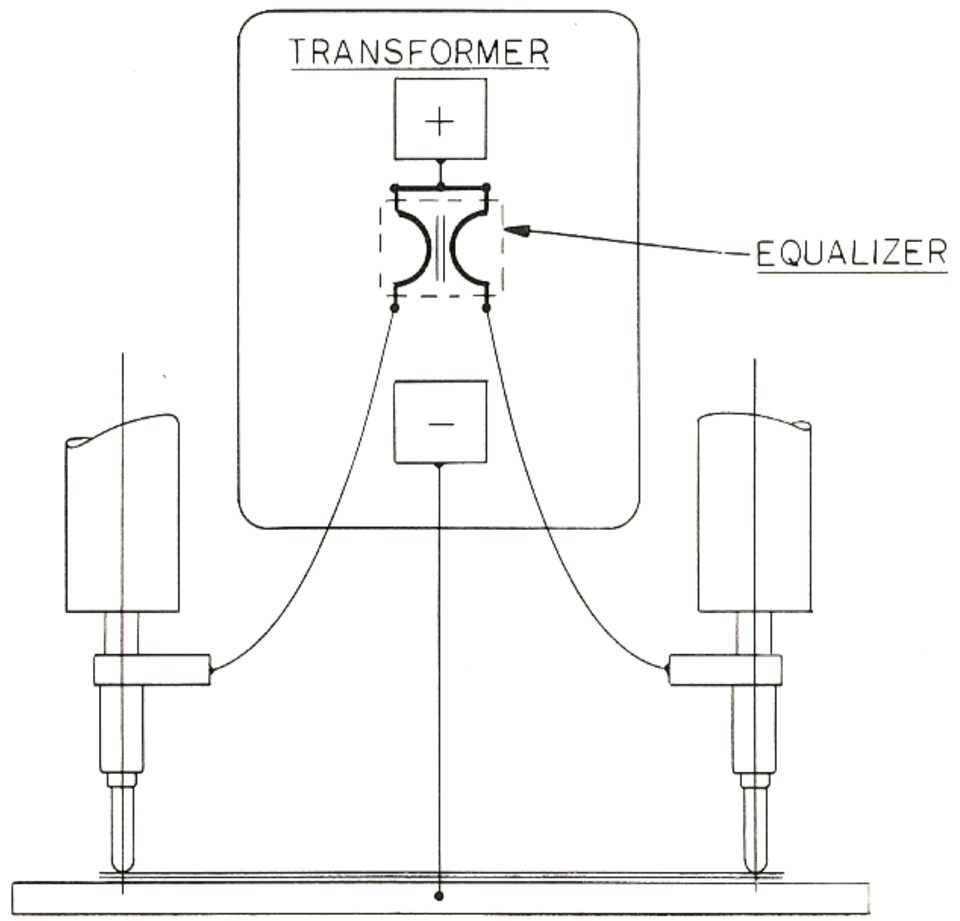

WELD-CURRENT EQUALIZER USED AS CURRENT SPLITTER ON INTERNALLY-PARALLELED OR MACHINE TYPE TRANSFORMERS